EVB & Level3
Overview for Aces

Arkadiy Bolshov
Massachusetts Institute of Technology

March 25, 2002

Level3.

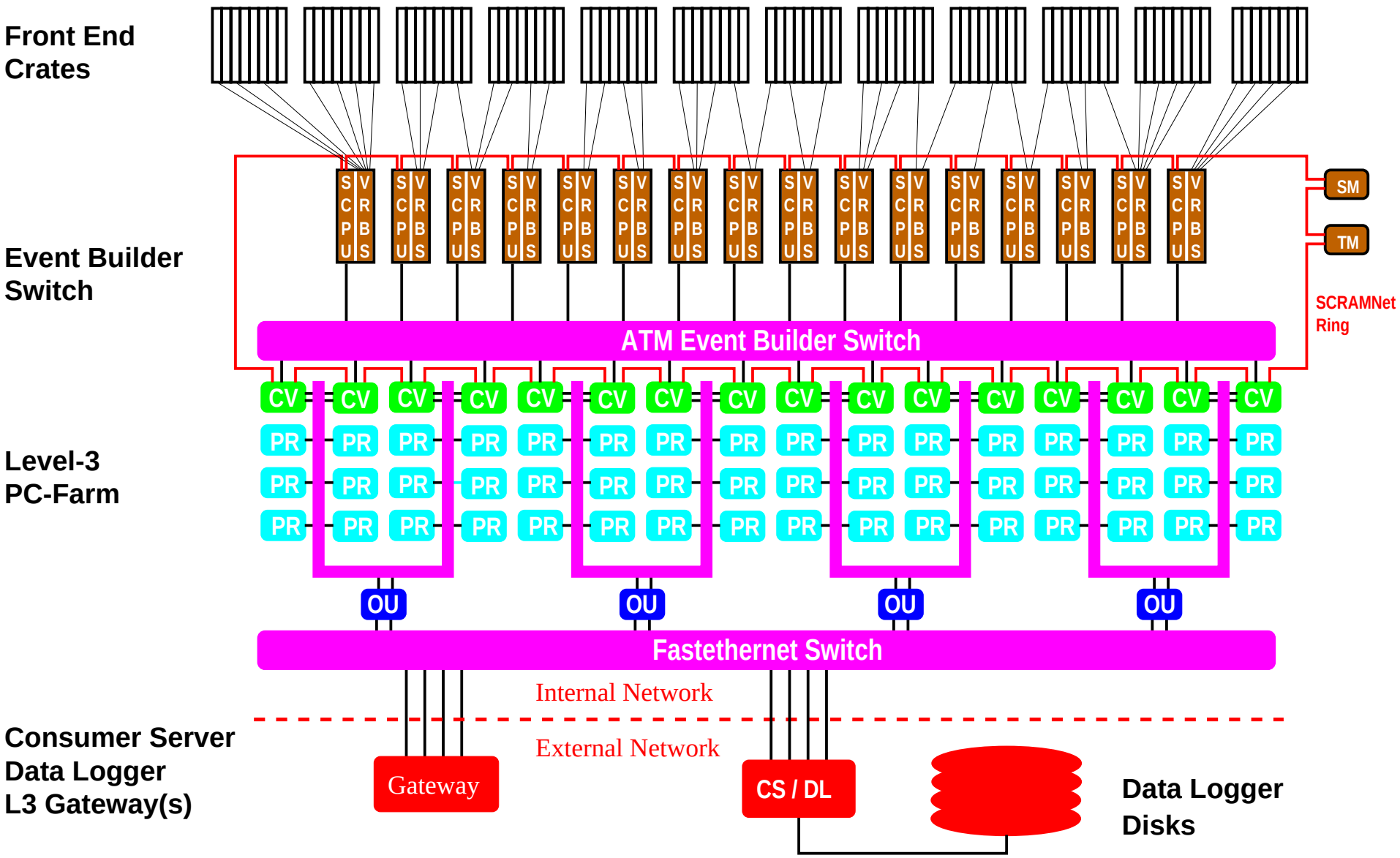
Front End Crates
Event Builder Switch
Level-3 PC-Farm
Consumer Server Data Logger L3 Gateway(s)
SCPU
VRBS
SM
TM
SCRAMNet Ring
ATM Event Builder Switch
CV
PR
OU
Fastethernet Switch
Internal Network
External Network
Gateway
CS / DL
Data Logger Disks

Event Builder Overview

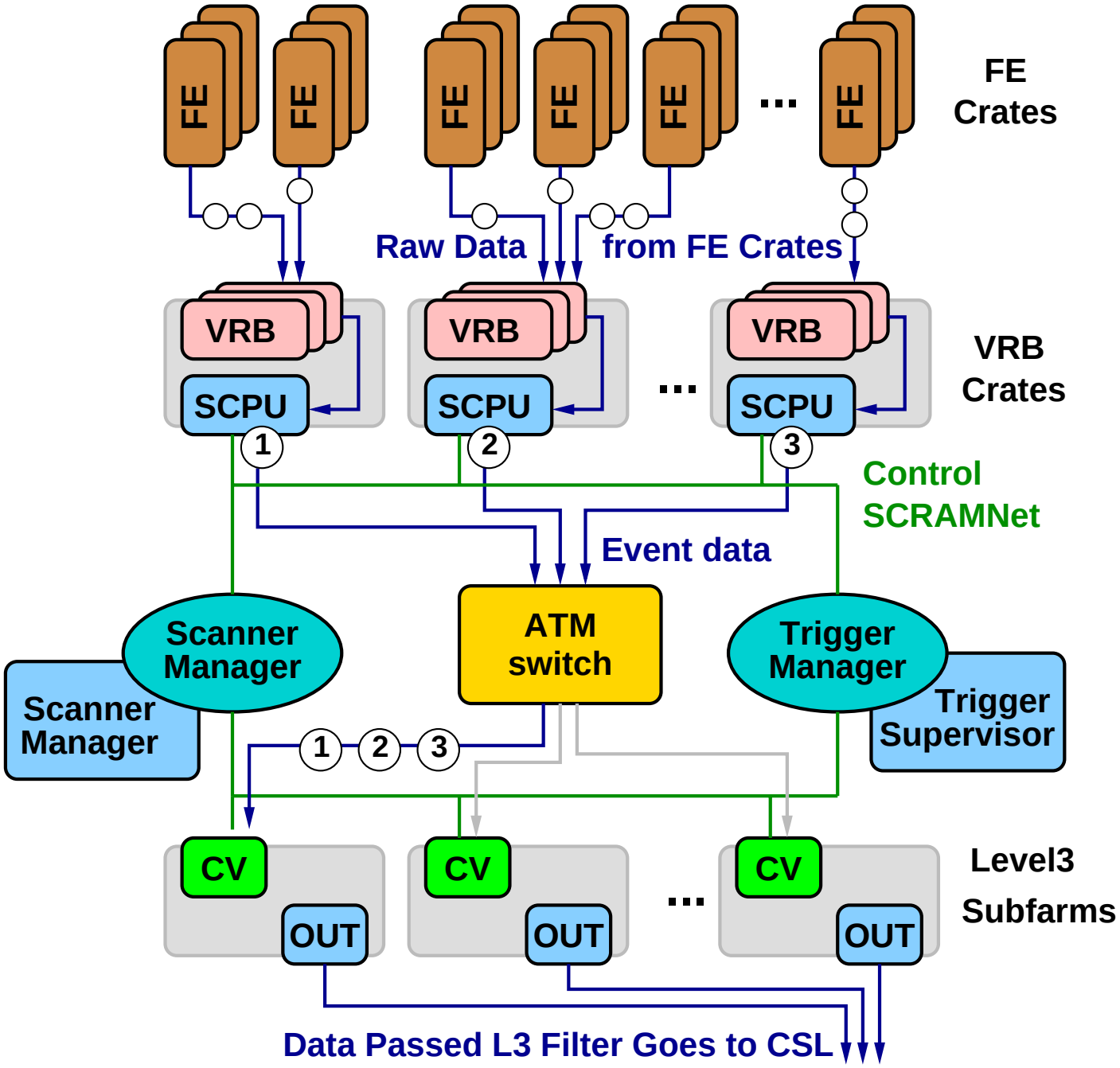

Event Builder :
Combines all event fragments from FE into one event.

Level3 :
Runs executable which makes L3 trigger decision.

VRB crate (a.k.a. SCPU or EVB crate)

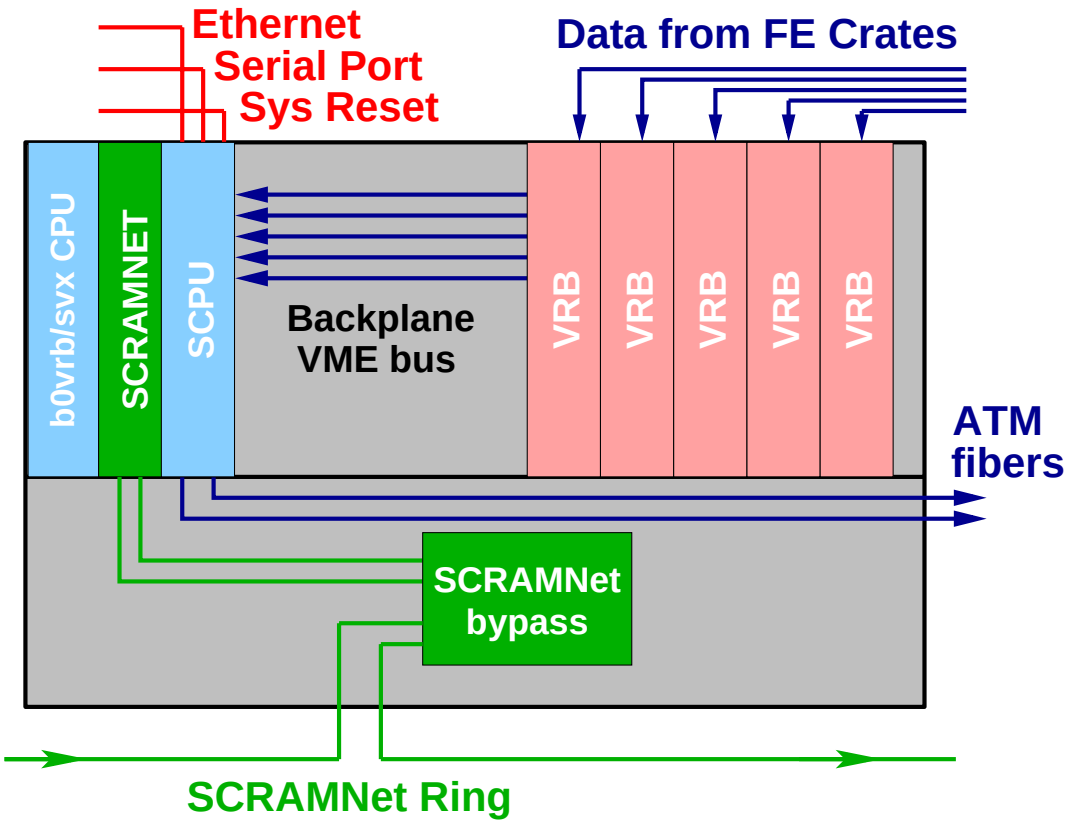

Functions:

- Event pieces (links) are loaded to VRBs by FE crates
- Scanner Manager (SM) detects L2 trigger from Trigger Manager
- Scanner Manager notifies SCPUs about trigger.
- Scanner CPUs (SCPUs) read VRB banks from VRBs concatenate them into one piece.
- All Scanner CPUs send event fragments through ATM to a single Converter chosen by SM.

Event Builder always talks to all SCPUs, so all VRB crates must be alive!

EVB Crate Possible Actions

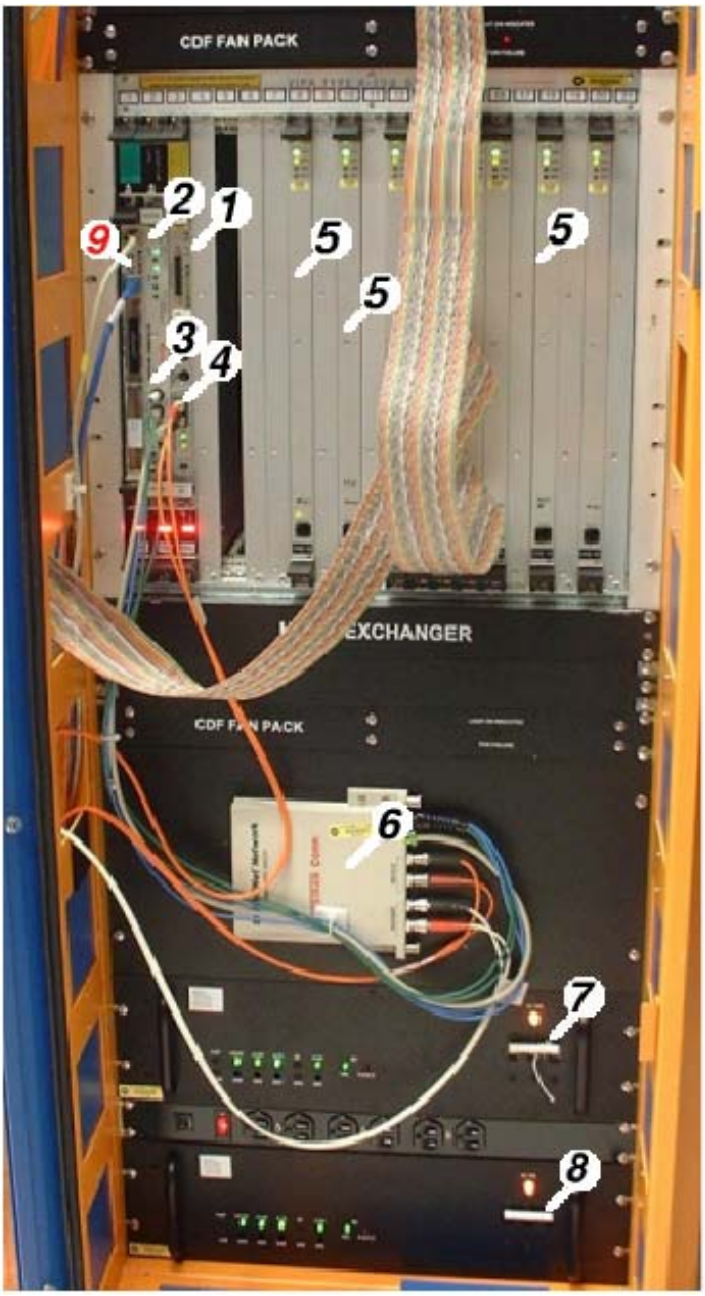

1. SCPU Reset Button
2. ScramNet Card Lights
3. ScramNet Fibers
4. ATM Fibers
5. VRBs
6. ScramNet Bypass
7. Upper Crate Power Switch
8. Lower Crate Power Switch
9. Crate Reset Button

- Reboot Crate - do software reboot from control room.
- Reset SCPU - push reset button on SCPU (slot 3)
- Reset Crate - push reset button on master board (slot 1). (Only if said by expert or popup window)
- Powercycle the Crate - Turn the power switch off, wait for 30 sec, turn it on. (Only if said by expert or popup window)

Running Multiple Hardware Partitions with L3/EVB.

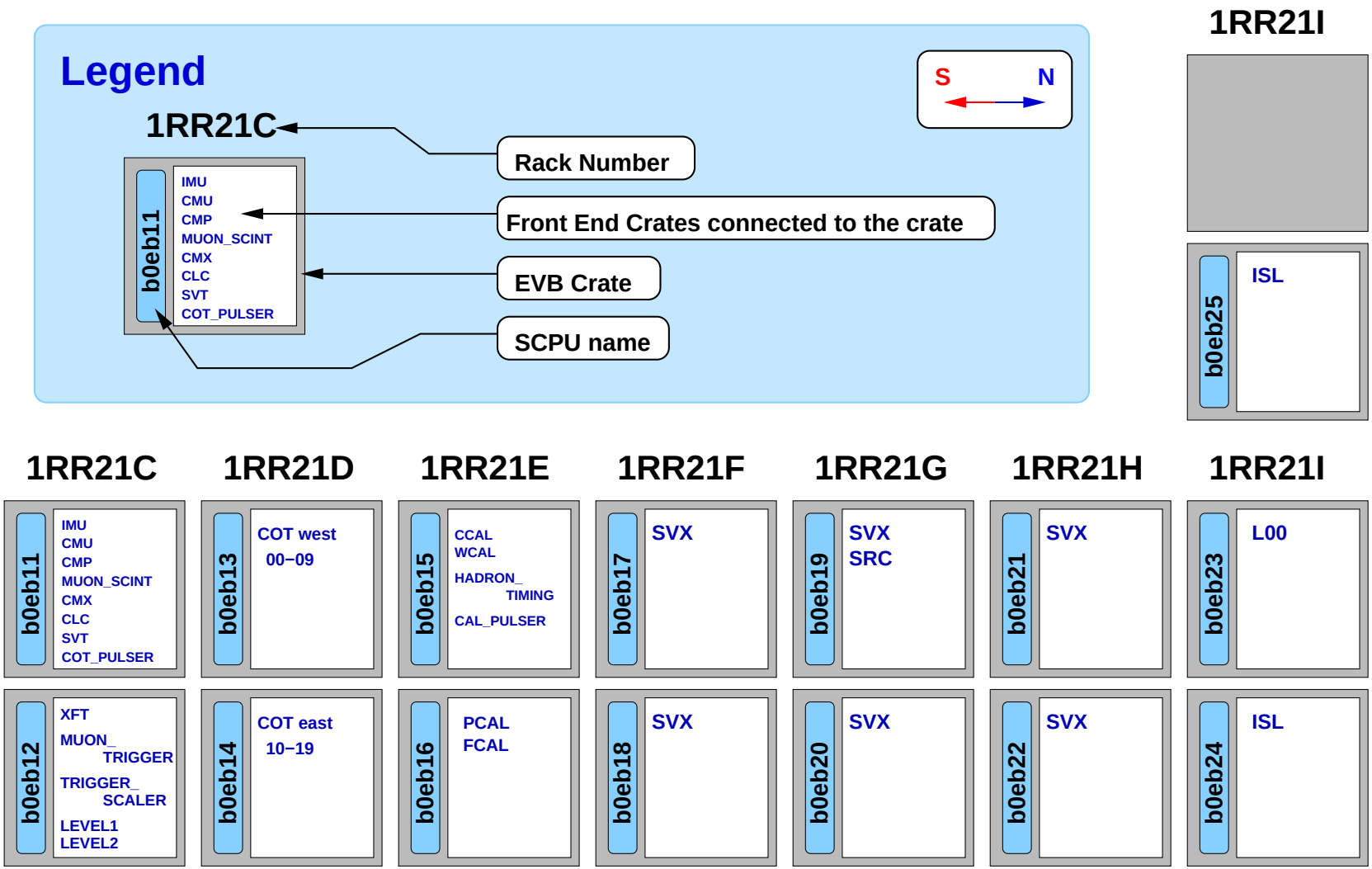

Software Event Builder

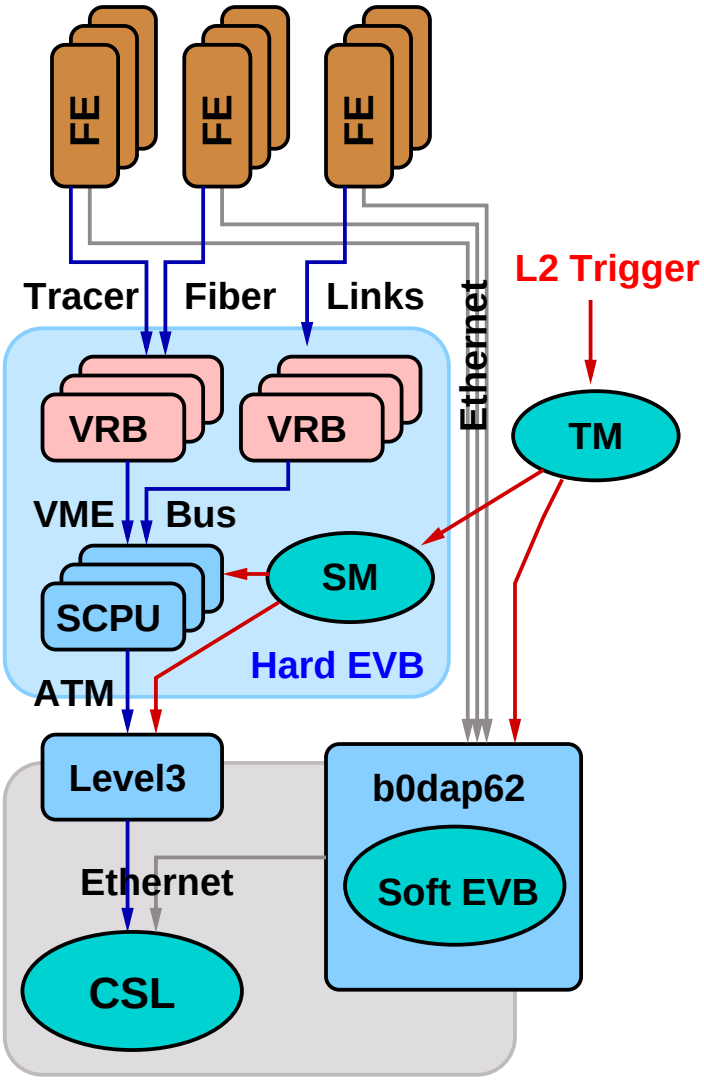

- Takes event data directly from FE crate by Ethernet.
- Runs data merger package, Reformatter and Level3 filter.
- Can work in Hardware or Software partitions.
- Generally much slower than Hardware EVB.

Do not page Hardware EVB pager about Software EVB problems.
:)

L3 subfarm definition

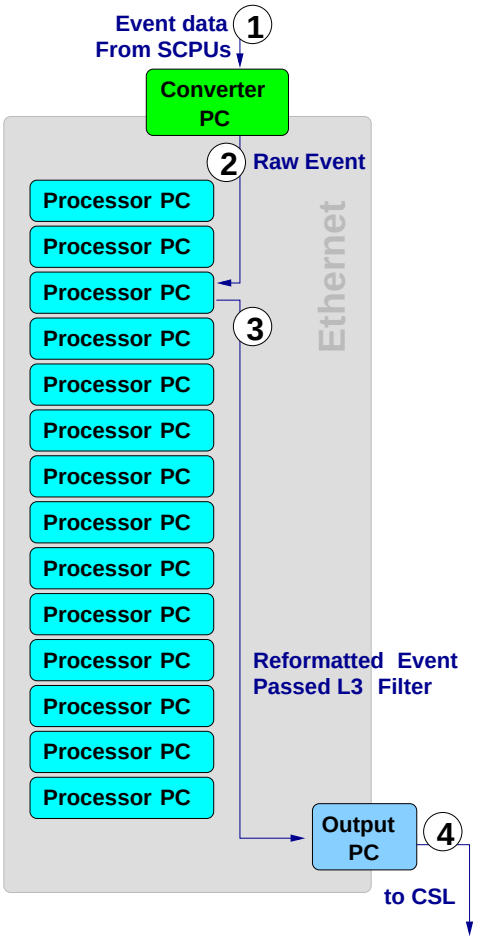

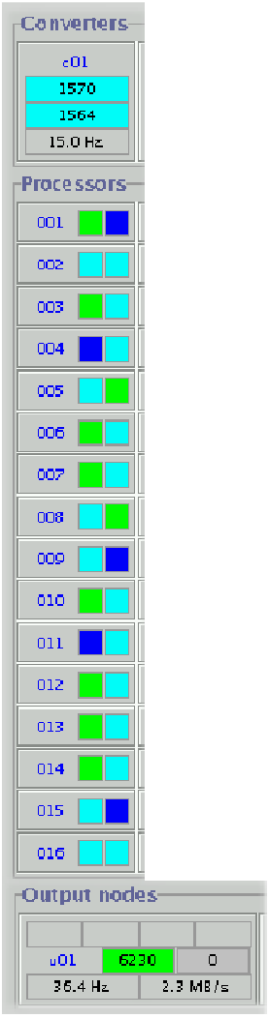

Functions:

1. Event fragments come to the Converter node from SCPUs.
2. Converter combines fragments into one piece (raw event) and sends it to free Processor node in a subfarm.
3. Processor PC rearranges event data to offline (TryBoss) format and applies L3 trigger. Passed events are written to the Output node.
4. Output node forwards event to CSL.

Processor node details

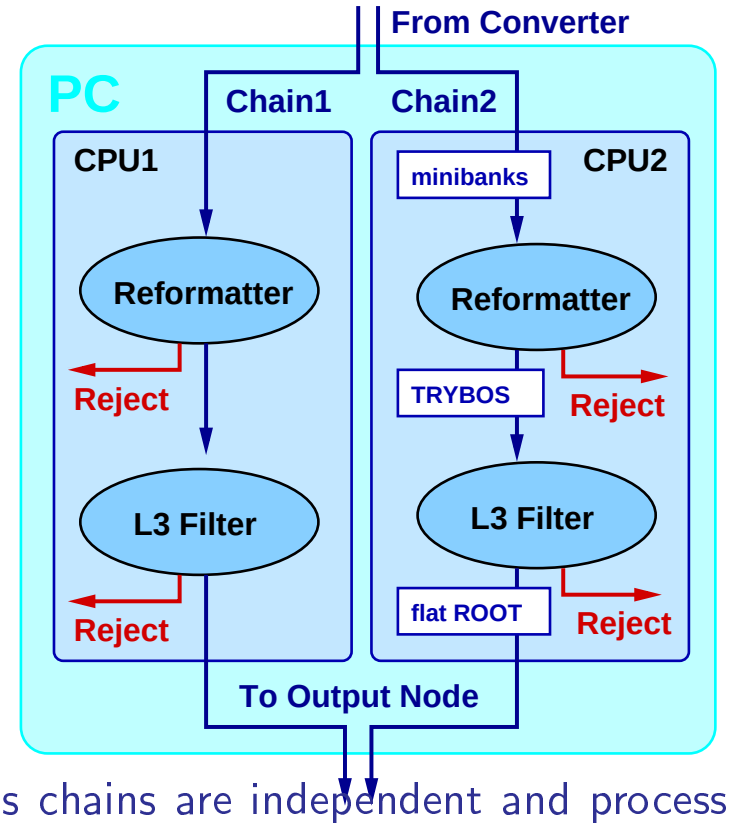

Two analysis chains are independent and process different events.
(Two boxes on Level3 Display)

Reformatter:

- Rearranges events to standard offline format
- Performs a number of data quality checks.
- Discards corrupted events
- Generate Reformatter error if event is rejected.

L3 Filter:

- Runs offline-type reconstruction
- Determines event type. Decides pass/fail
- Failed events are discarded

Events can be discarded by both Reformatter and L3 Filter!

Level 3 Filter executable is selected in Run Control GUI

Gateways and proxies

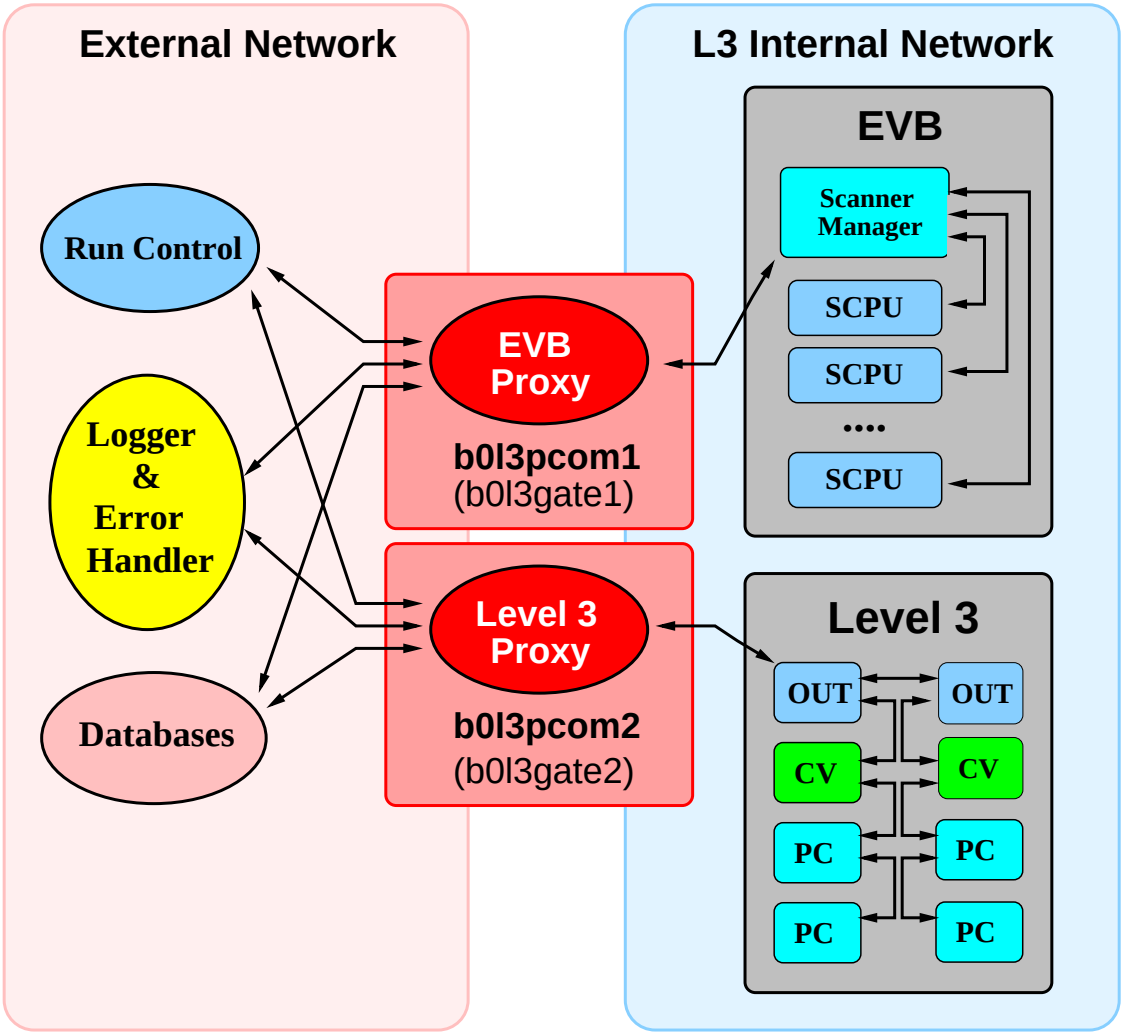

- Connect RC and EVB/L3. Forward transition messages.
- Transport error messages to RC Error Logger.
- Transport monitoring information.
- Both must be alive for the system to work

Level3 Manager

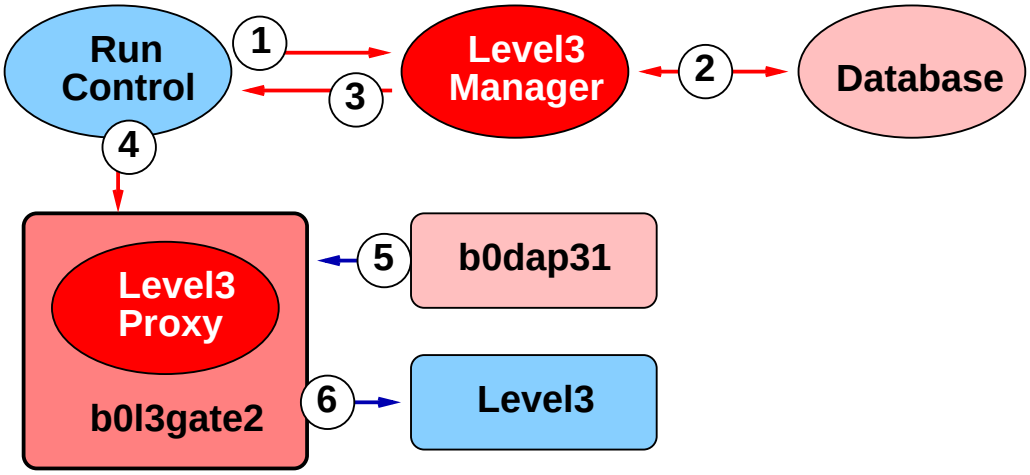

1. RC requests a new Calib tag from L3 Manager.
2. L3 Manager requests Database for a new Calib tag.
3. L3 Manager generates Calib tag if a new calibration exists. Return the Calib tag number to RC.

   If this step is failed RC generates "orange window of death" and proceeds with default Calib tag.
4. RC notifies Level3 Proxy.
5. Level3 Proxy picks up Calib tag generated by L3 Manager from online computer.
6. Level3 Proxy distributes Calib tag over Level3 Farm.

Do not page Level3 pager about L3 Manager problems. :)

Monitoring Tools

- EVB/L3 Ace Control Panel
  - go to EVB/L3 web page and follow instructions
- EvbMon
  > setup fer
  > daqmon
  → On daqmon GUI select EVB
- L3 Display
  → On daqmon GUI select L3
- Dead Time Display
  → On daqmon GUI select
- Error Handler
  – Started with Run Control.

EVB/L3 Ace Control Panel

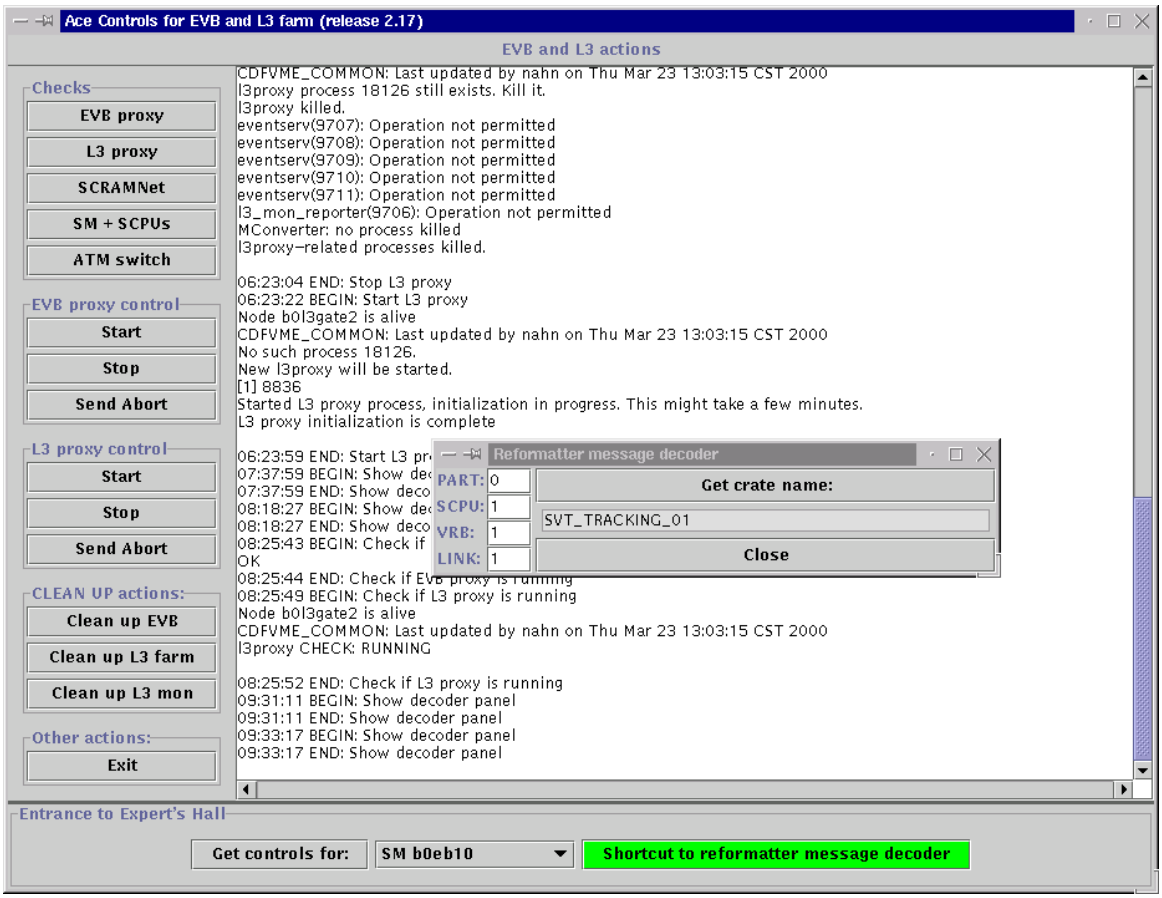

- Check status of primary components
- Start, stop proxies and do full cleanup of EVB and L3
- Reset state of any partition (e.g., in case of RC crashes)
- Gives access to EVB Expert GUIs and Reformatter Decoder

Level3 Display.

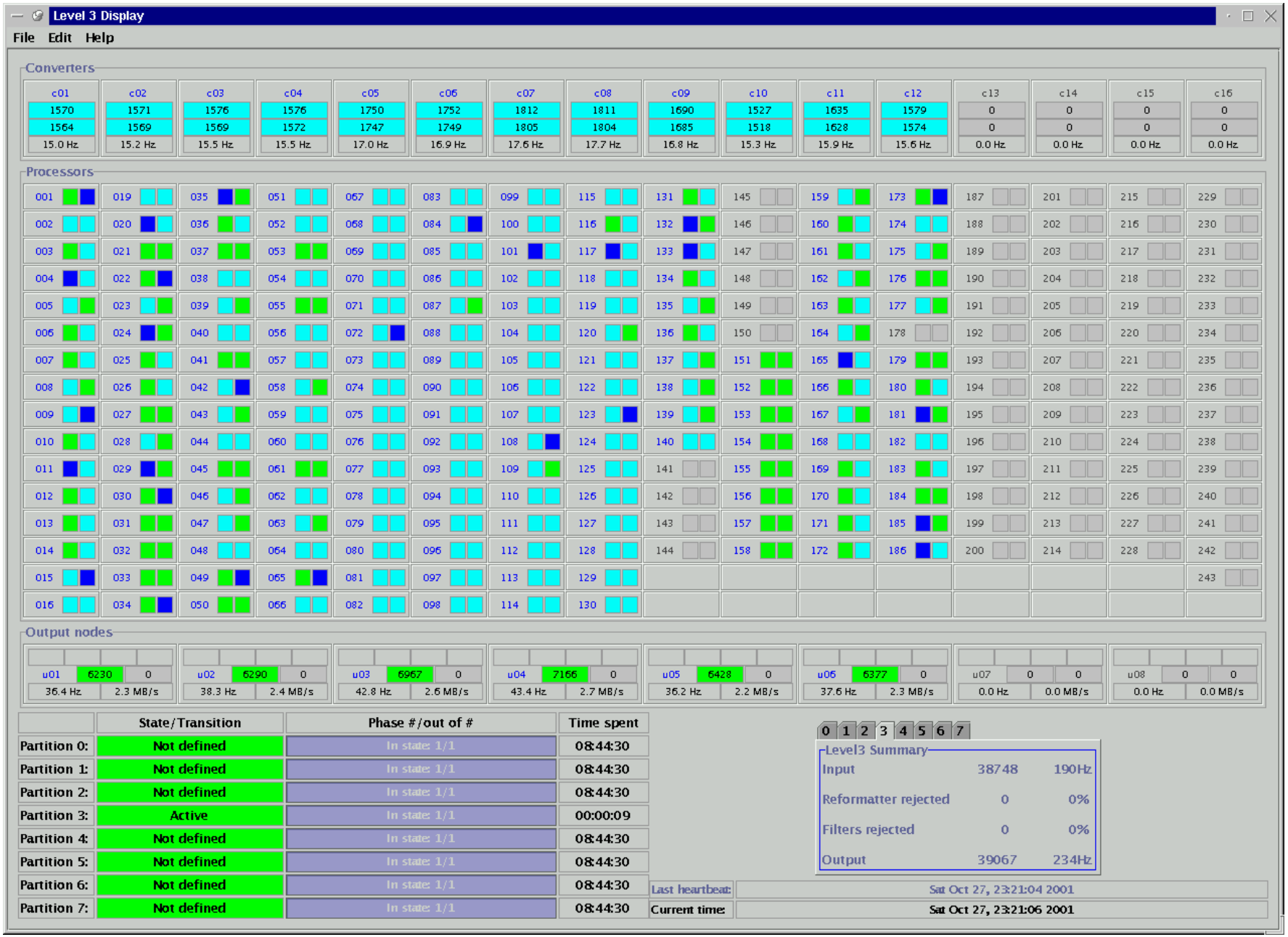

Level3 Display

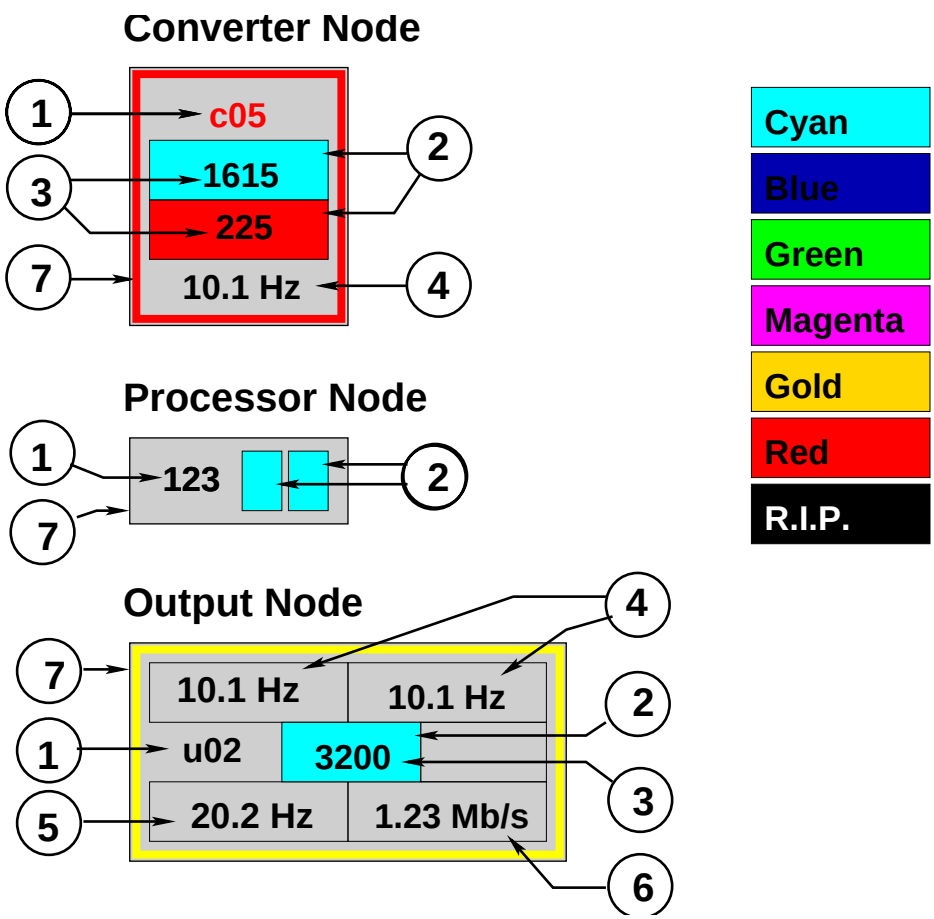

1. Node name. Color coded *Control* state.
2. Color coded *Analysis Chain* state. Two per node.
3. Number of processed events. (Converter and Output only)
4. Event rate for the subfarm. (Converter and Output only)
5. Output event rate for the Output node. (Output only)
6. Output data rate for the Output node
7. Border. Color coded *System* state.

Level3 Display

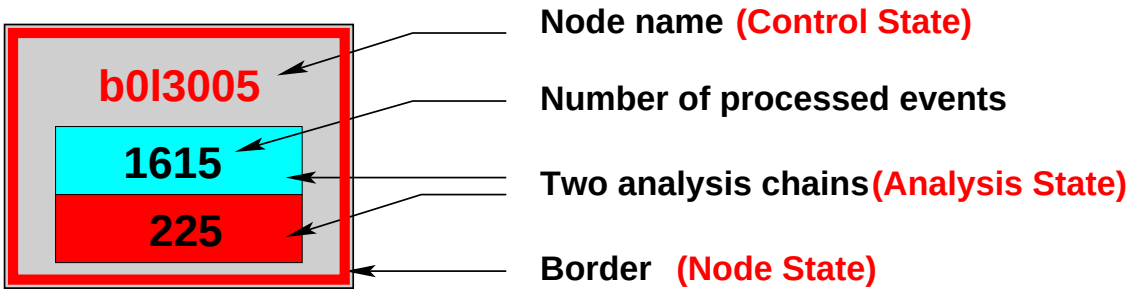

BLUE	CYAN	GREEN	MAGENTA	GOLD	RED	R.I.P.

Control State

- Error (red) - Level3 Errors (Click on the box to see Error messages).

Analysis State

- Input (Cyan) - Waiting for input.
- Busy (Dark Blue) - Chain is busy with event.
- Output (Green) - Waiting for output
- End (Magenta) - Node ended the run.
- Old (Gold) - Not updated. Probably monitoring failure.
- Dead (Red) - L3 Filter crashed. All necessary procedures are done automatically at the end of run.
- Unpingable (Black) - No connection to the node. If will not disappear in several minutes node is probably dead.

Node Hardware State

- Occasional yellow - Ok if not for the whole farm.
- Permanent red - System/HW problem (Disk is full etc.)

For color map check Level3 Display Help menu.

L3 Partition Monitor of L3 Display

	State/Transition	Phase #/out of #	Time spent
Partition 0:	In transition: End	Collect EoR summary: 2/3	00:00:13
Partition 1:	Not defined	In state: 1/1	00:00:13
Partition 2:	Not defined	In state: 1/1	00:00:13
Partition 3:	Not defined	In state: 1/1	00:00:13
Partition 4:	Not defined	In state: 1/1	00:00:13
Partition 5:	Not defined	In state: 1/1	00:00:13
Partition 6:	Not defined	In state: 1/1	00:00:13
Partition 7:	Not defined	In state: 1/1	00:00:13

Shows hardware partitions states and transitions.

Things worth to check

- How many hardware partitions are running with Level3.
- Bar State/Transition is yellow - Level3 received the RC transition message shown in the box.
- Field Time spent is more than 5 min - Failure.
- All bars are red - Level3 Proxy is dead or L3 display lost connection. Check L3 Proxy from Ace Control Panel. Restart L3 Display or L3 Proxy depending on result.

Level3 Summary

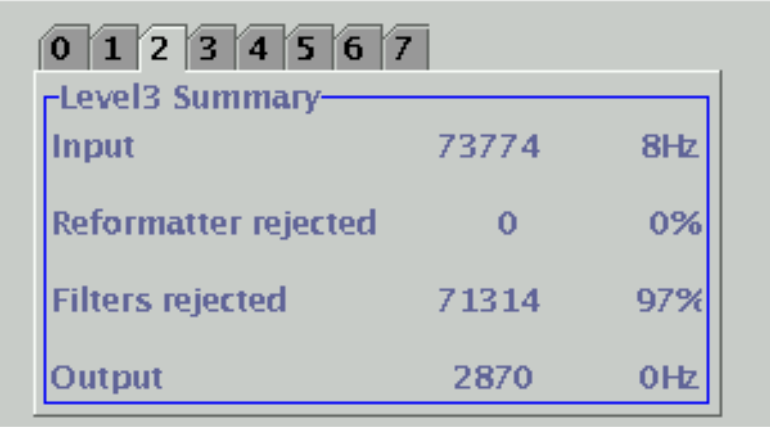

Shows input output and rejection rates/events.

Things worth to check

- Input count and rate. Compare with RC number.
- Reformatter rejection count and rate. If more than 1%,- do something. (Failing component?)
- Filter rejection count and rate. If close to 100%,- do something. (Noisy Level1 trigger?)
- Output count and rate. Compare with CSL rates.
- Notice that each Level3 chain send a "Begin Run" event to the output node at the end of ColdStart transition. Run begins with NON ZERO output event counter.

L3 Display: Node details

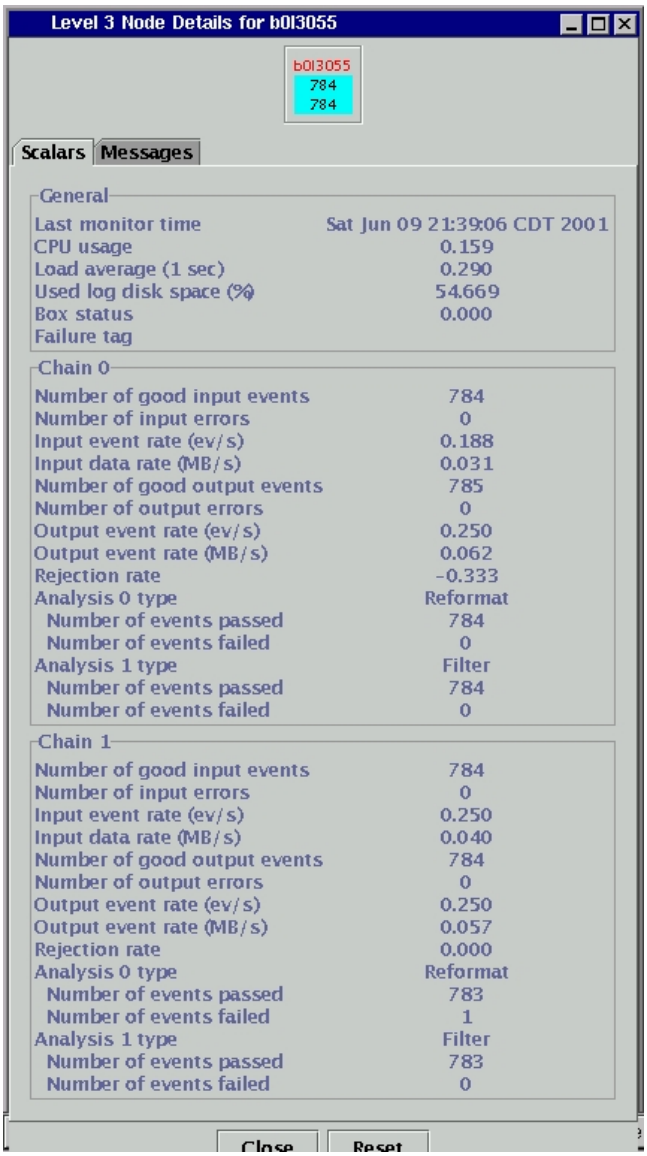

Things worth to check

- Monitoring heartbeat
- Events pass/fail for Reformatter and L3 Filter
- Number of input/output errors. (Esp. for converters)
- Input/Output data/event rate. One can find the size of the event by dividing data rate to event rate.

To open: click on any node of L3 Display

EvbMon

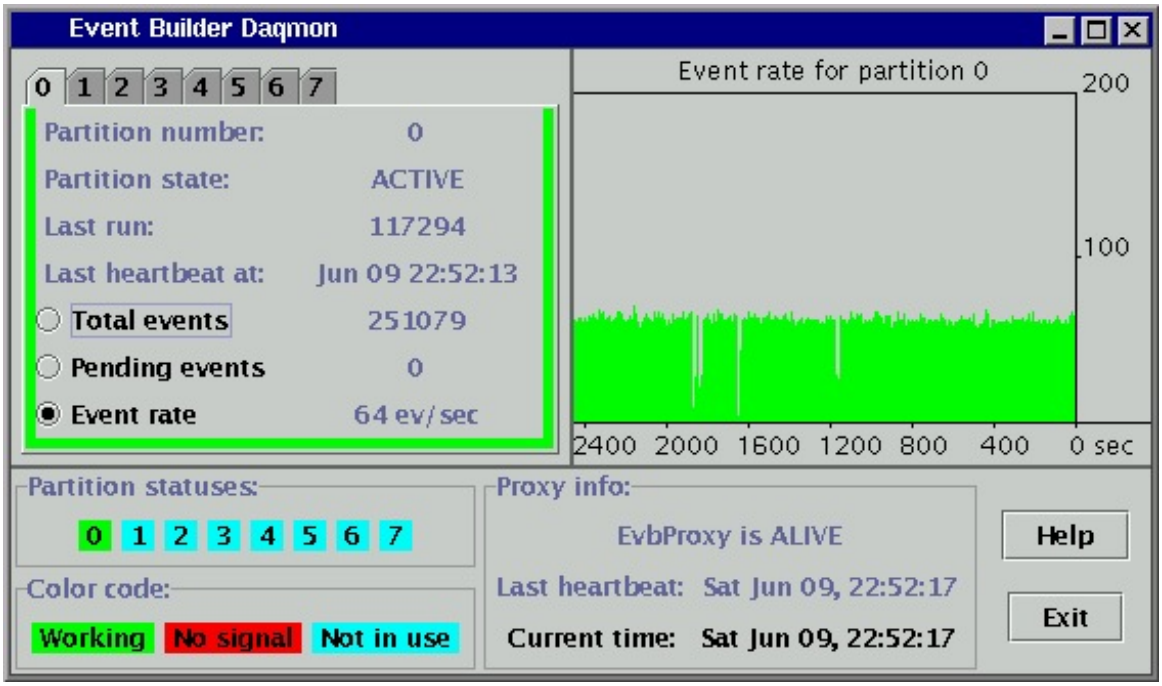

Shows partition states and primary statistics

Things worth to check

- Pending events indicate problems up/down stream
- EvbProxy is alive/dead
- Event rate
- Monitoring heartbeat

EVB/L3 errors and recovery

Run-time errors

- Deadtime.
- DONE timeout.
- BUSY timeout.
- Dealing with Reformatter Errors.
- Things worth to keep eye on.

Error Logger

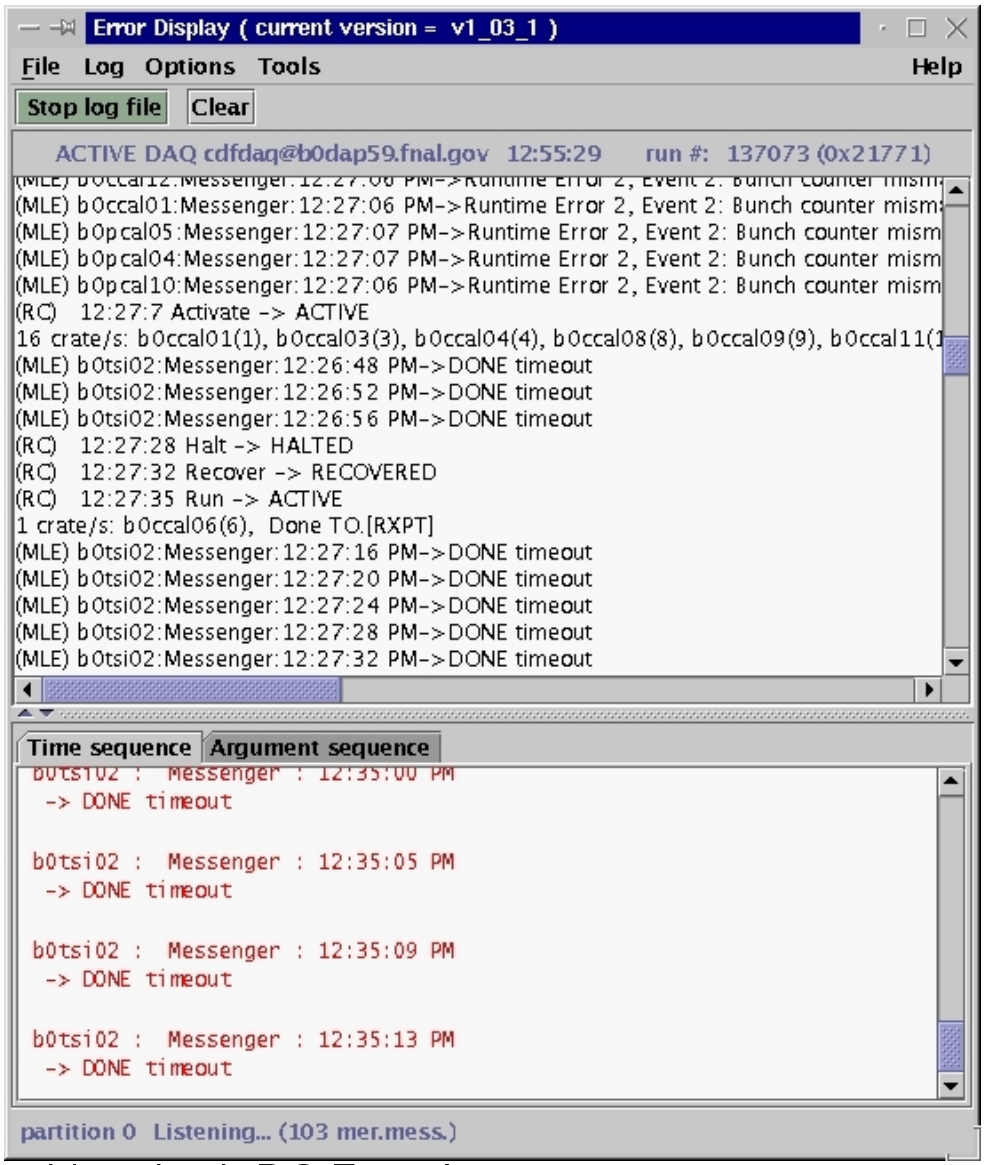

Whenever in troubles check RC Error Logger.

Deadtime Monitor

CDF Trigger Rate Monitor

Freeze Display!

Trigger Rate Monitor 02:59:35

Partition: 0
Trigger Type: Cosmics_All [2,165]

Run Number: 122506
Event Number: 12213

Runtime: 294.9s
Livetime: 293.4s

General | PreFred | Fred | Fred Prescaled | TS | L2 (0-63) | L2 (63-127) | L3 (0-63) | L3 (64-127) | L3 (128-191) | L3 (192-2

		Average	Current	Current
Total deadtime	[%]	0.52	0.00	
Inhibit / Total DT	[%]	0.00	0.00	
BUSY / Total DT	[%]	0.00	0.00	
L2 readout / Total DT	[%]	0.01	0.00	
Readout / Total DT	[%]	44.44	100.00	
L1DONE / Total DT	[%]	0.00	0.00	
L2 / Total DT	[%]	55.56	0.00	
TSI / Total DT	[%]	0.00	0.00	
Buffer 0 Use	[%]	83.34	79.52	
Buffer 1 Use	[%]	15.24	19.28	
Buffer 2 Use	[%]	1.38	1.20	
Buffer 3 Use	[%]	0.04	0.00	

	Count	<Rate>	Rate [Hz]	Rate (log scale)
L1 Accept	12,213	41.4	39.7	
L2 Accept	12,213	41.4	39.7	
L2 Reject	0	0.0	0.0	
Fred L1A	12,266	41.6	39.7	
Calib L1A	0	0.0	0.0	

Livetime + Deadtime - Runtime = 0 ?	503,174,327 + 2,612,604 - 505,786,931 = 0
L2A - GL2A = 0 ?	12,213 - 12,213 = 0
L2R - GL2R = 0 ?	0 - 0 = 0
L2A + L2R - L1A = 0 ?	12,213 + 0 - 12,213 = 0
Synchronization Errors	0

Inhibit High voltage inhibit. Check HV monitor.

Busy: - VRB is full. Check EvbMon for pending events. Cleanup EVB if needed.

L2 readout: Problem between L2 desision crate and Trigger Supervisor. Reboot b0tsi00. Page TSI expert.

Readout: The time between FE crate receiving L2 trigger and set DONE signal is too long. Reboot the FE crate which cause the deadtime. Page expert.

L1DONE: Silicon trigger problem. Page silicon.

L2: Alpha board problem. Not enough processor power. Reboot Alpha board. Remove b0l2dec00 from run. Page L2 expert.

TSI: - Interval0 (RC settings) is too big. EVB is too slow. Check EvbMon for pending events. Cleanup EVB if needed.

Trigger

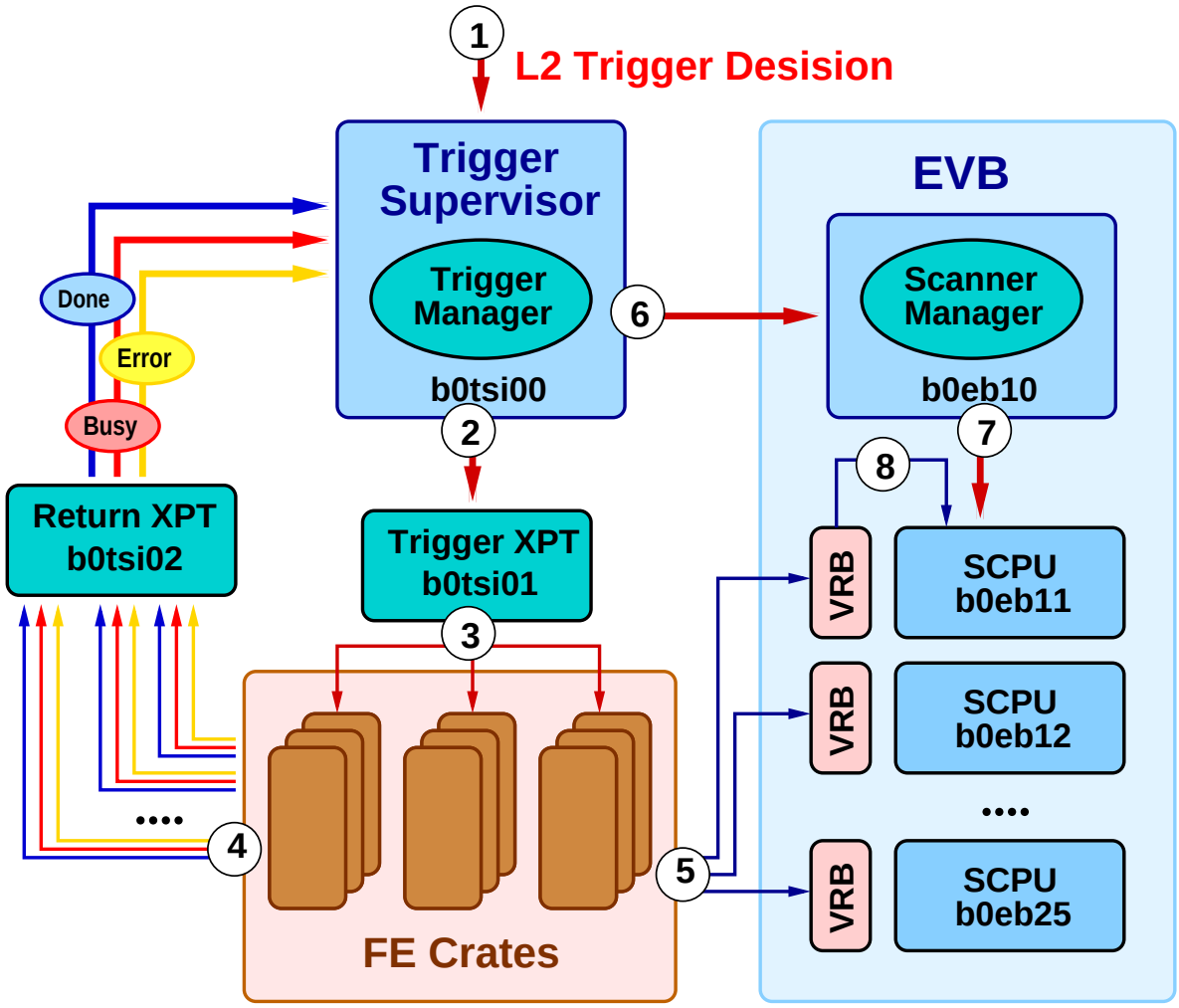

1. Trigger comes from Level2 to Trigger Supervisor (TS)
2. TS passes it to Trigger Cross Point
3. Cross Point fans it out to FE crates
4. FE crates load event and send DONE to Return XPT
5. FE crates start loading data to VRBs
6. TS send trigger to SM after getting all DONEs from FE
7. SM notifies SCPUs about trigger
8. SCPUs load data from VRBs and wait for further instructions from SM

Timeouts

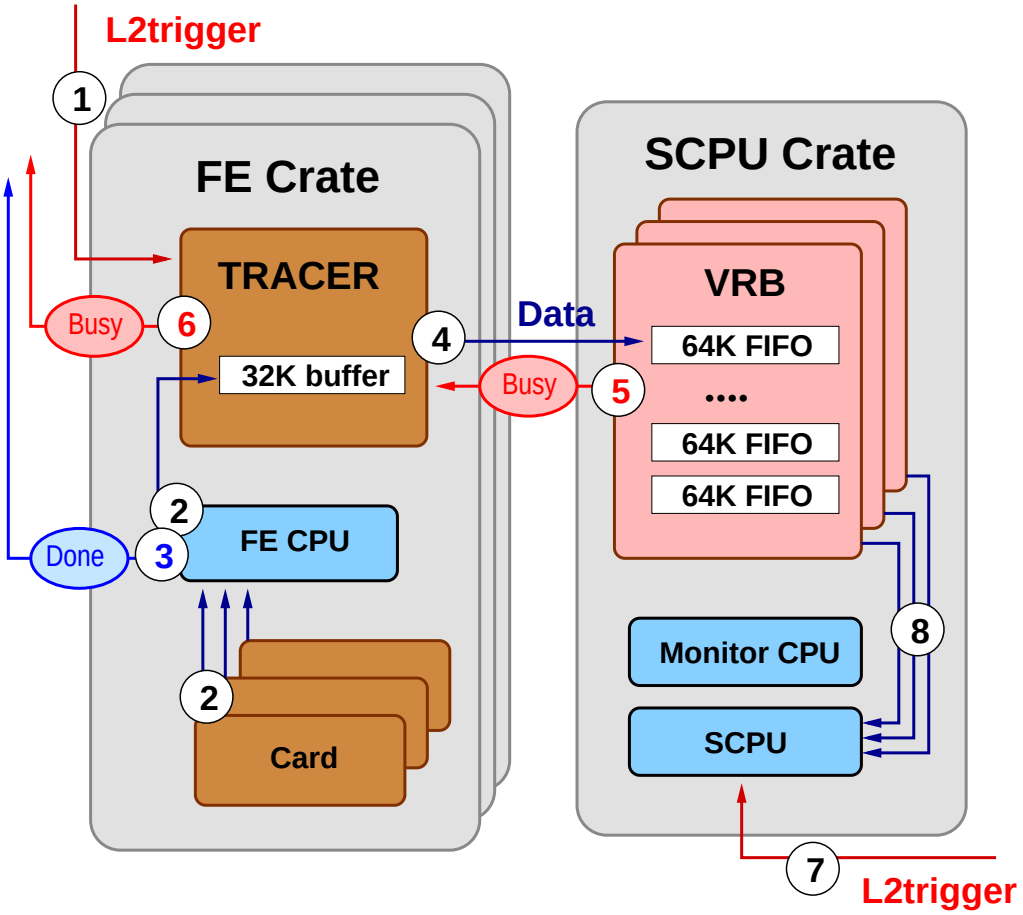

1. Trigger comes to Tracer from Trigger Cross Point
2. Cards load data to Tracer Buffer.
3. FE CPU sets DONE signal if everything is ok. If DONE signal is not set Return XPT send DONE timeout to TS
4. Tracer sends Data to VRB FIFO
5. If FIFO is full VRB sends BUSY signal to Tracer
6. Tracer sends BUSY signal to Return XPT
7. If everything is ok SM notifies SCPUs about trigger
8. SCPUs load data from VRBs

Dealing with Reformatter Errors.

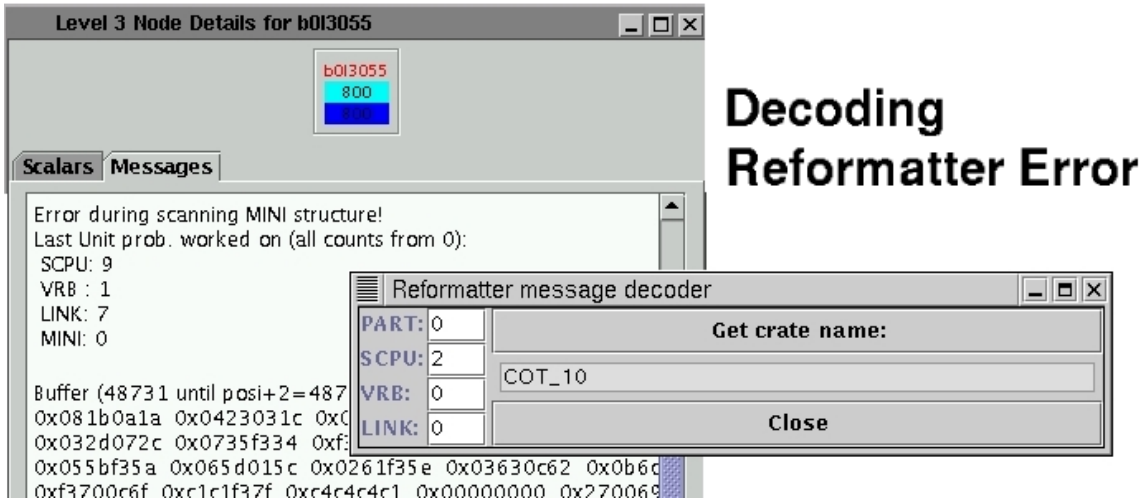

Find relevant FE component with a tool started by green button on Ace Control Panel.

- You should be in Active or Idle state to use the tool.
- If you can not start the tool restart Ace Control Panel.
- Server is not found popup - try again, page Level3.
- Link is not in use popup - Corrupted data can not provide us with correct link number. Change link number to 0 and try again.

The reformatter rejection rate could be found at L3 rate monitor (part of L3 Display).
It gives the average reformatter rejection over the run
A new monitoring tool called RefMon is also running.
RefMon calculates the rejction rates over the last 30 seconds. If rejection exceeds some predefined level (currently 1 %) RC pops up an orange window with instructions for the Aces

Check L3 Rate Monitor for reformatter error rate.

Networks, Buffers, Data Flow, Errors.

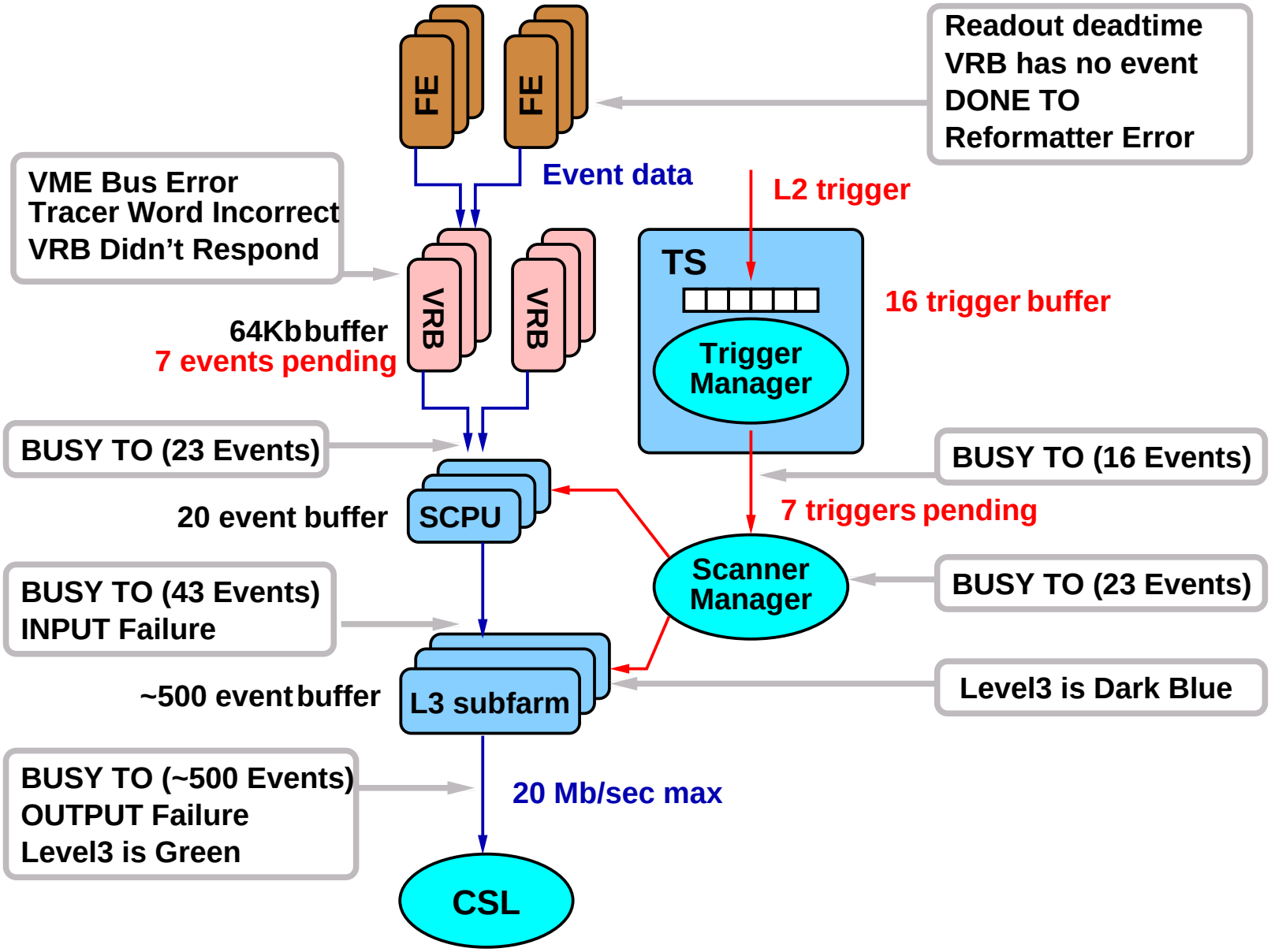

Level3 monitoring data flow

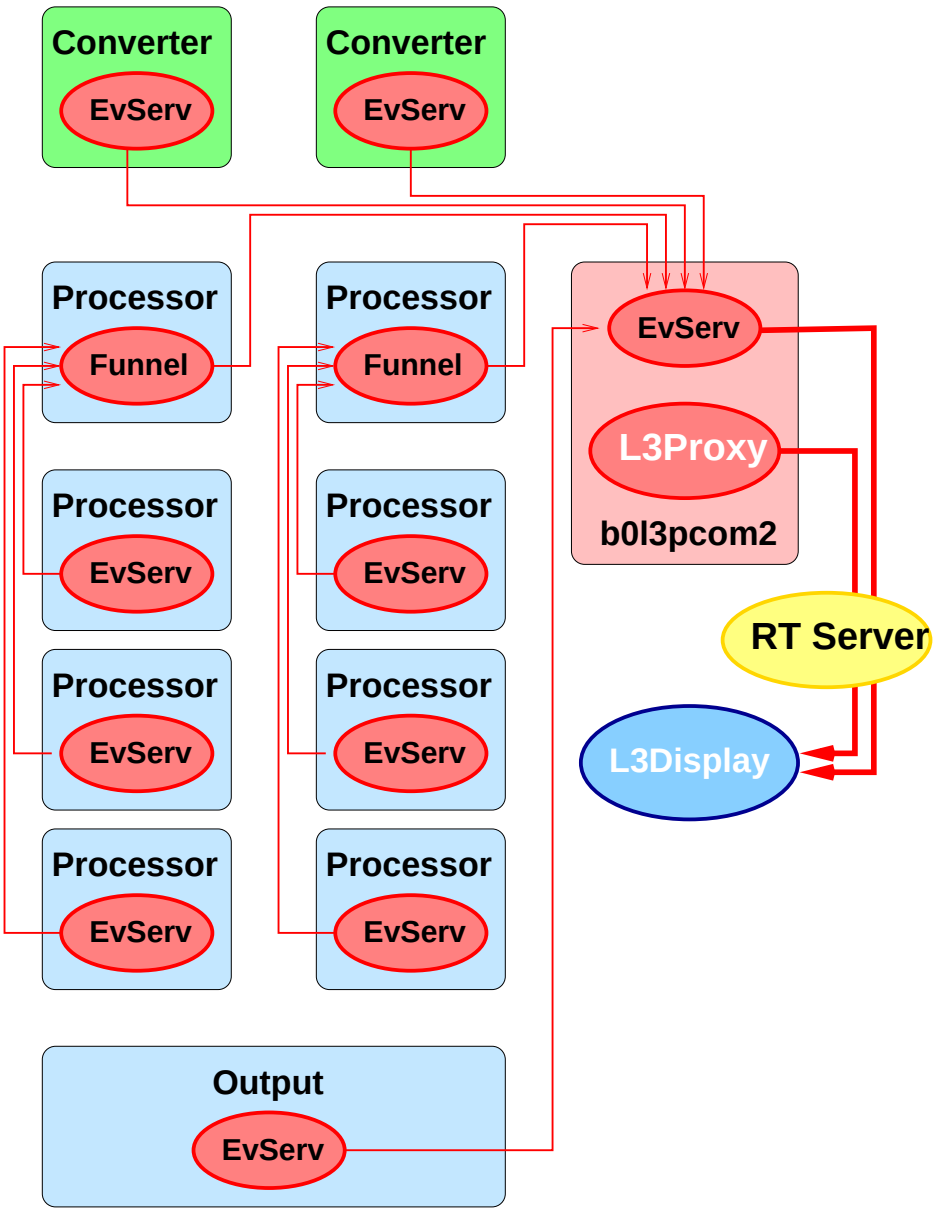

- Eventserv - Accepts and sends monitoring messages.
- Event Funnel - L3 wrap for Eventserv. Accumulate monitoring messages. Sends them in 4 second intervals.

General Remarks

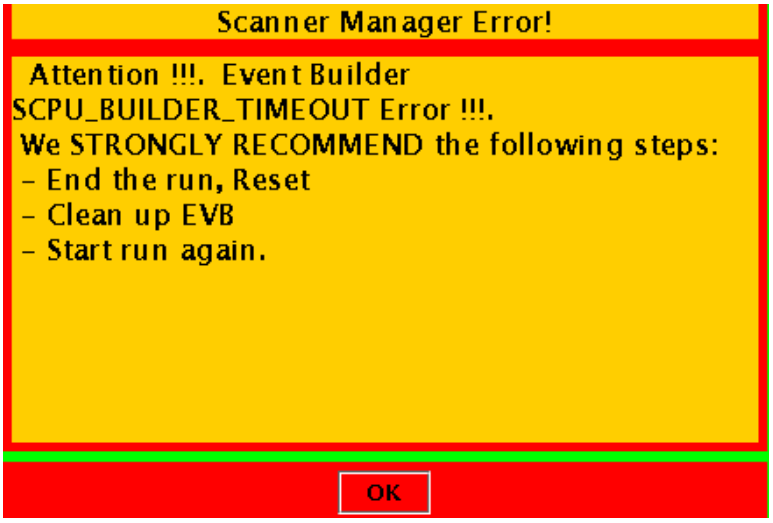

- If you get an orange popup window with EVB/Level3 problem follow the instructions.
- Check RC Error Display for error messages.
- Any transition can not take more than 5 minutes. If it takes more it means a problem.
- DONE timeout (Readout deadtime). - Problem with FE.
- BUSY timeout (Busy deadtime). - Problem with TS or EVB or *Down the stream*. (check Magic Numbers).
- You have to be in START state when cleaning up EVB and Level3 or restarting Proxies.
- If you abnormally closed the partition without Reset you have to cleanup EVB.

Things to Keep an Eye on

- L3 Display Color.
  - Gold (Old) - Monitoring problem. Restart L3Display.
  - Dark Blue (Busy State) - not enough process power. Add subfarms
  - Green (Output State)- problem is downstream. Check CSL rates and message queues. 20Mb/sec is max output capacity
- Check if CSL gets events at all.
- Check Rates and Dead time.
- Check Reformatter rejection rate.
- Look if Level3 proxy is alive on L3 Display.
- Look if EVB proxy is alive on EVB monitor.

Support.

Quick Help.

DONE Timeout	**BUSY Timeout**
Deadtime (ALL)	**BUSY Deadtime**

EVB	**Level3**
·**EvbMon**	·**L3 Display (COLORS)**
·**EVB Errors (RC Error Display)**	·**Level3 Errors (RC Errors Display)**
	·**Reformatter Errors**
·**EVB Failed Transition**	·**Level3 Failed Transition**
·**Cleanup EVB**	·**Cleanup Level3**

Monitoring Tools

Glossary.

Manual. (PostScript 20Mb)

Featured Articles.

Boris Iyutin

See CDF Note 5793.

Expert list

- Arkadii Bolshov (pager)
- Nuno Leonardo (pager)
- Ilya Kravchenko (cell)

Phone/Pager Numbers are posted in the Control Room and on ace web page.