Event Builder & Level3

— Overview for Aces —

Alberto Belloni
Massachusetts Institute of Technology
June 18th, 2003

Summary

- Introducing the EVB/L3 systems: function, layout, location
- EVB overview
- L3 overview
- Monitoring tools: Ace Control Panel, L3 Display
- Errors and recovery
- Support, documentation, people

Several diagrams taken from CDF note 5793

The hardware EVB

The L3 farm

System Overview

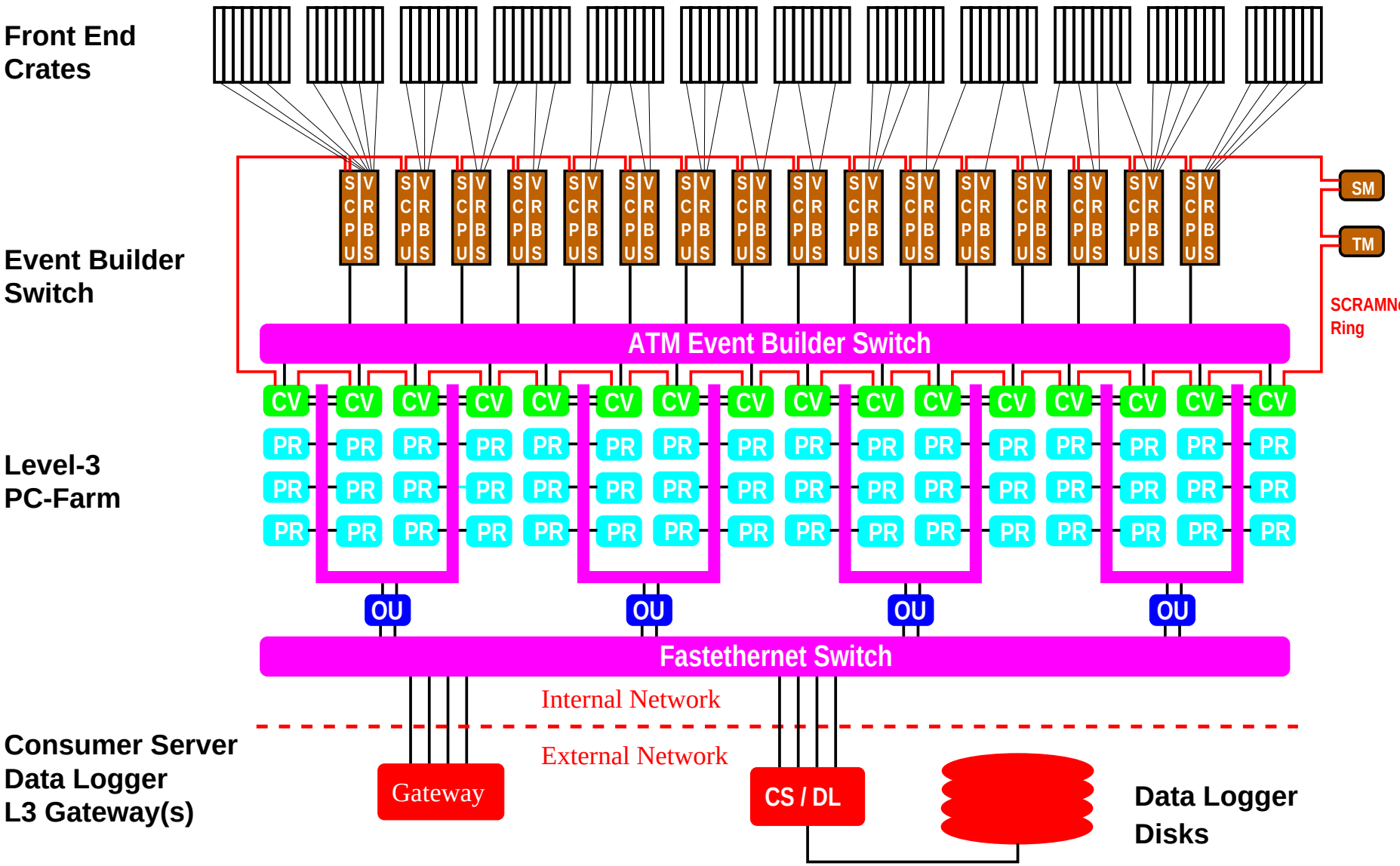

EVB crate

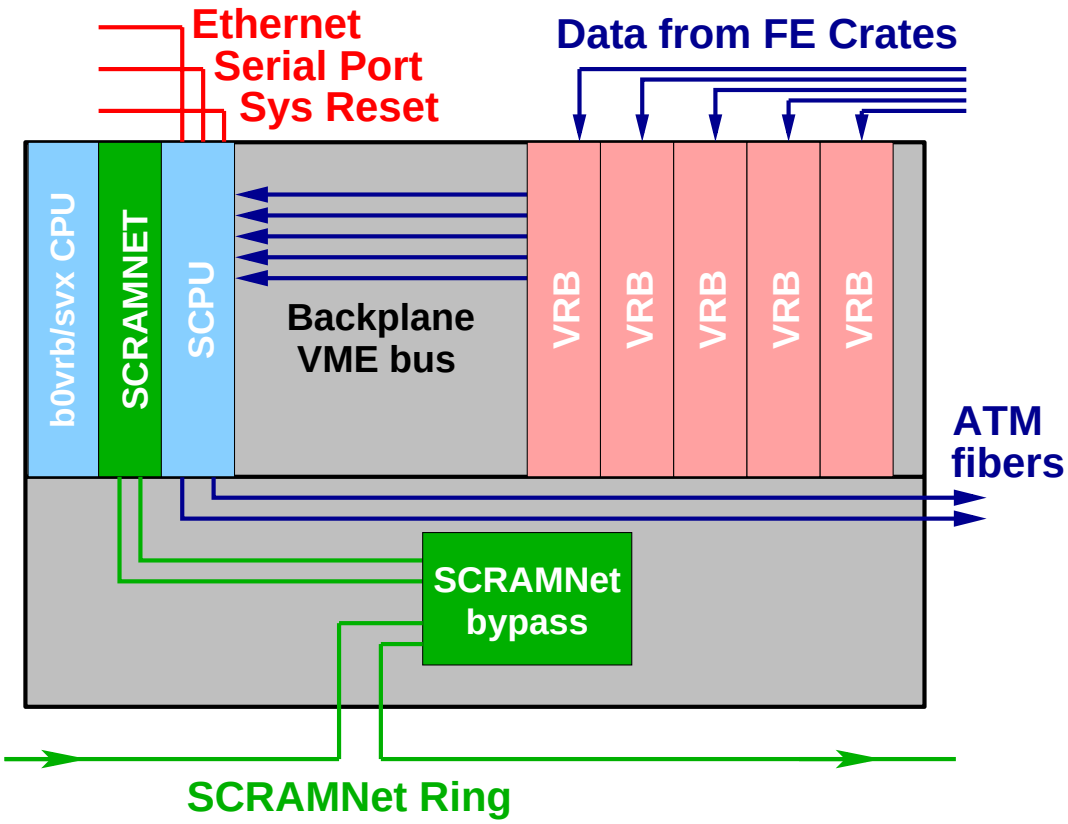

Functions:

- Event pieces (links) are loaded to VRBs by FE crates
- Scanner Manager (SM) detects L2 trigger from Trigger Manager
- Scanner Manager notifies SCPUs about trigger
- Scanner CPUs (SCPUs) read VRB banks from VRBs concatenating them into one piece
- All Scanner CPUs send event fragments through ATM to a single Converter chosen by SM

Event Builder always talks to all SCPUs, so all VRB crates must be alive!

EVB Crate Possible Actions

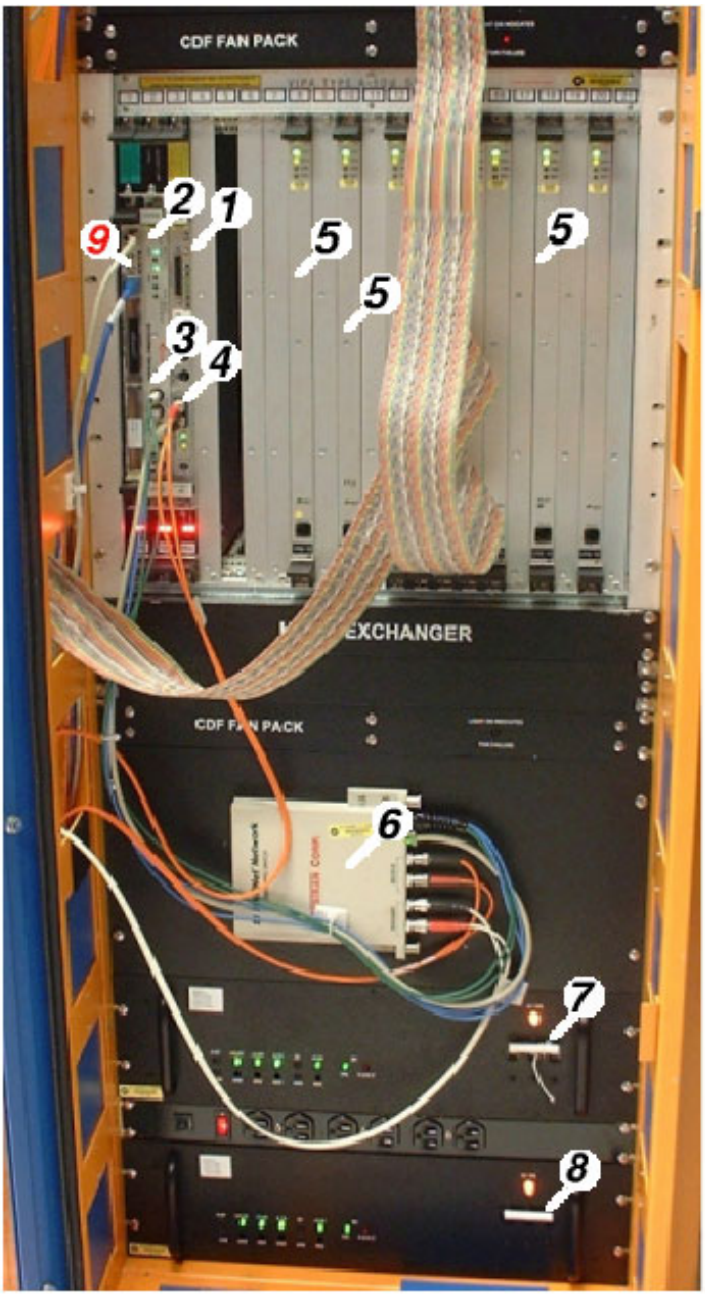

1. SCPU Reset Button
2. ScramNet Card Lights
3. ScramNet Fibers
4. ATM Fibers
5. VRBs
6. ScramNet Bypass
7. Upper Crate Power Switch
8. Lower Crate Power Switch
9. Crate Reset Button

- Reboot Crate - do software reboot from control room.
- Reset SCPU - push reset button on SCPU.
- Reset Crate - push reset button on master board. (Only if said by expert or popup window)
- Reset VRB - push reset button on VRB
- Powercycle the Crate - Turn the power switch off, wait for 30 sec, and turn it on. (Only if said by expert or popup window)

Running Multiple Hardware Partitions with L3/EVB

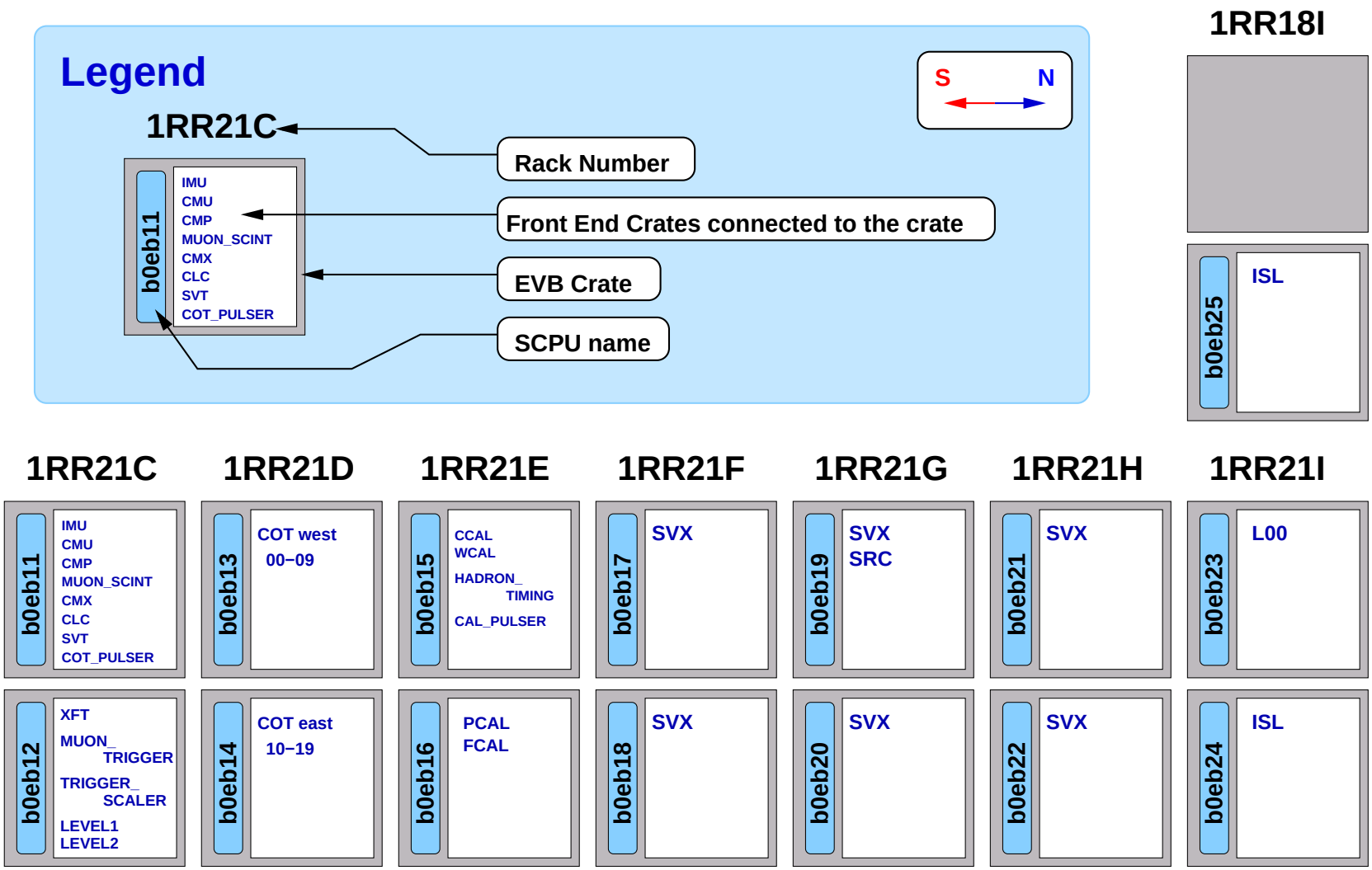

Software Event Builder

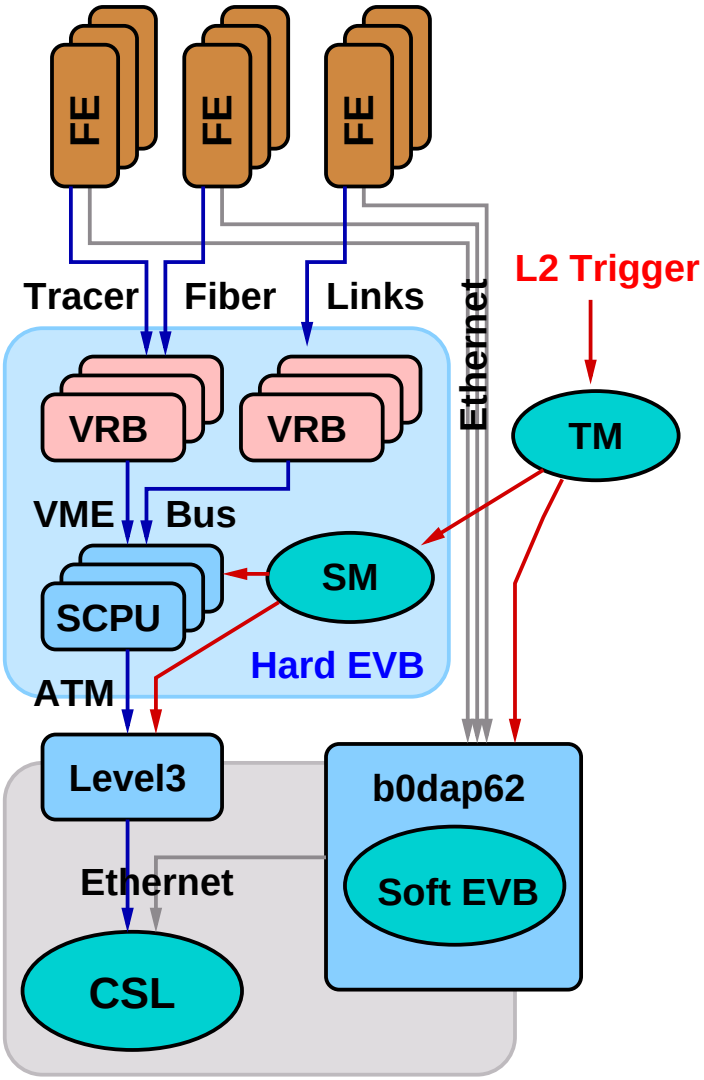

- Takes event data directly from FE crate by Ethernet.
- Runs data merger package, Reformatter and Level3 filter.
- Can work in Hardware or Software partitions.
- Generally much slower than Hardware EVB.

Do not page Hardware EVB pager about Software EVB problems :)

L3 subfarm definition

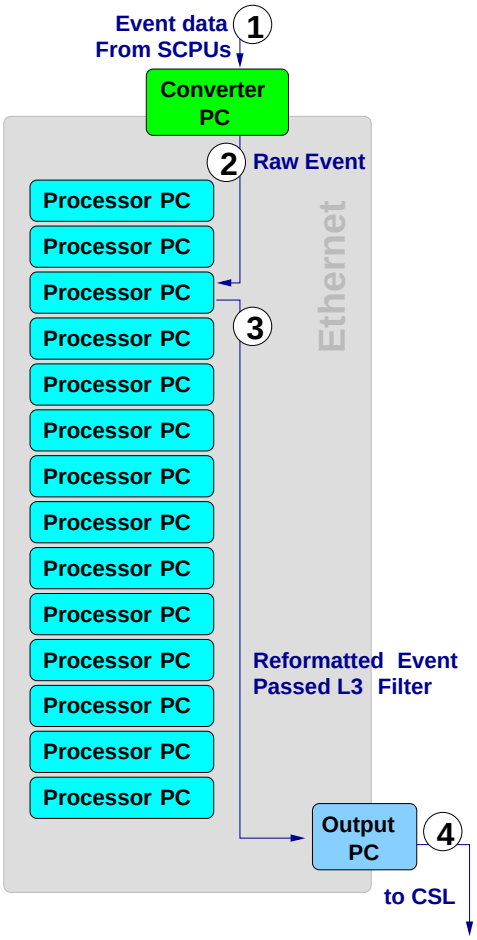

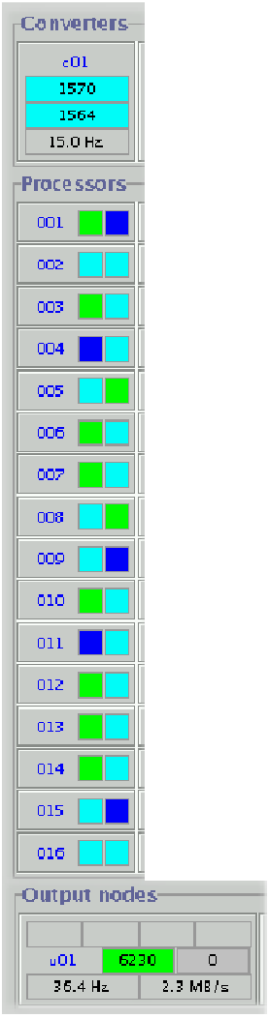

Functions:

1. Event fragments come to the Converter node from SCPUs.
2. Converter combines fragments into one piece (raw event) and sends it to a free Processor node in the subfarm.
3. Processor PC rearranges event data to offline (TryBoss) format and applies L3 trigger. Passed events are written to the Output node.
4. Output node forwards event to CSL.

Processor node details

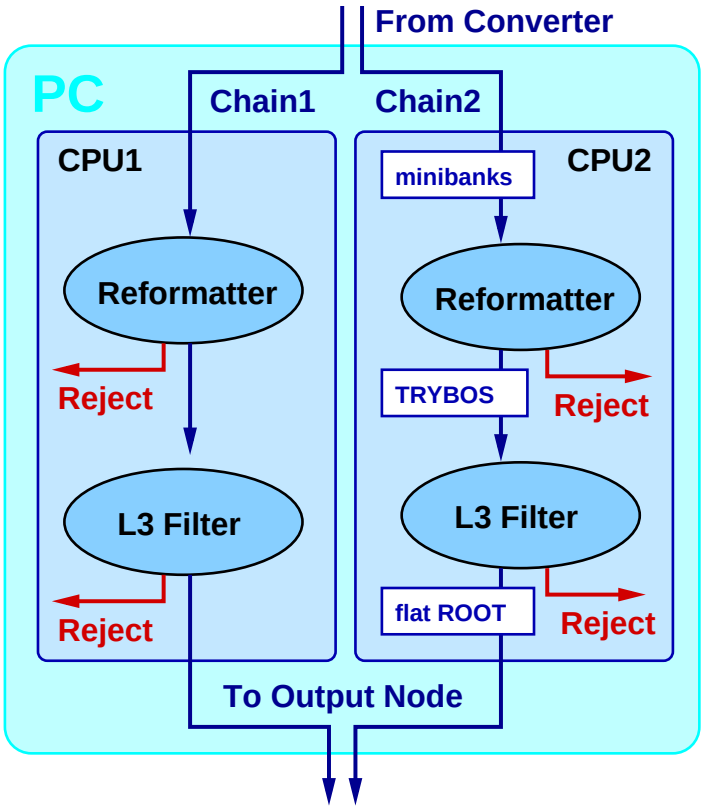

Two analysis chains are independent and process different events.
(Two boxes on Level3 Display)
Reformatter:

- Rearranges events to standard offline format
- Performs a number of data quality checks.
- Discards corrupted events
- Generate Reformatter error if event is rejected.

L3 Filter:

- Runs offline-type reconstruction
- Determines event type. Decides pass/fail
- Failed events are discarded

Events can be discarded by both Reformatter and L3 Filter!
Level 3 Filter executable is selected in Run Control GUI

Gateways and proxies

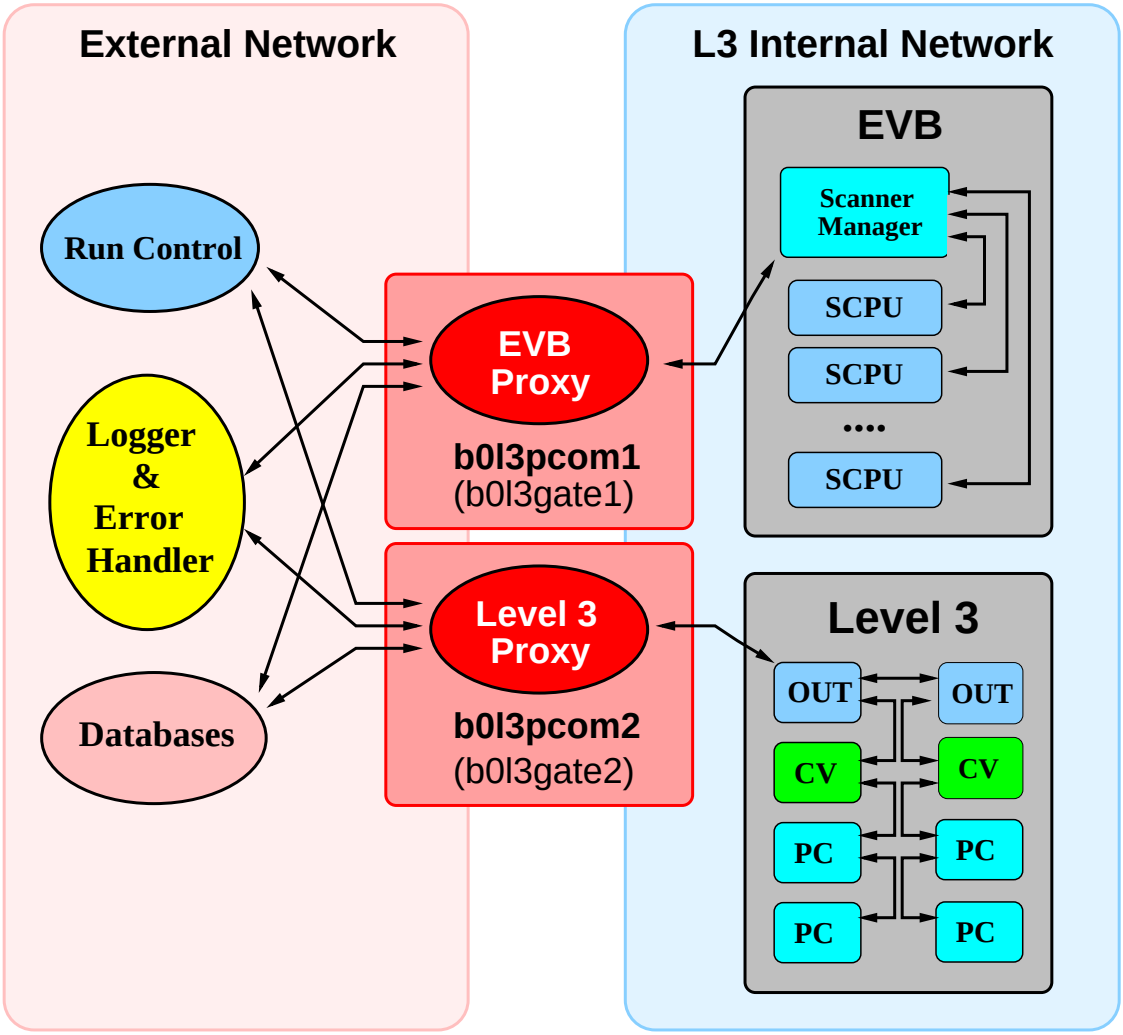

- Connect RC and EVB/L3. Forward transition messages.
- Transport error messages to RC Error Logger.
- Transport monitoring information.
- Both must be alive for the system to work.

Level3 Manager

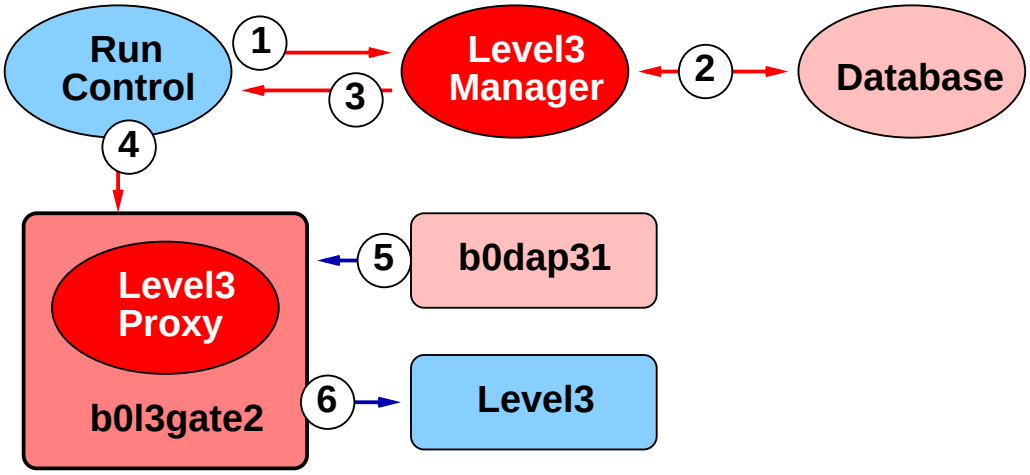

1. RC requests a new Calib tag from L3 Manager.
2. L3 Manager requests Database for a new Calib tag.
3. L3 Manager generates Calib tag if a new calibration exists. Return the Calib tag number to RC.

   If this step is failed RC generates "orange window of death" and proceeds with default Calib tag.
4. RC notifies Level3 Proxy.
5. Level3 Proxy picks up Calib tag generated by L3 Manager from online computer.
6. Level3 Proxy distributes Calib tag over Level3 Farm.

Do not page Level3 pager about L3 Manager problems. :)

Monitoring Tools

- EVB/L3 Ace Control Panel
  → Started with **EvbControl**
- L3 Display
  → On daqmon GUI select L3

- Dead Time Display
  → On daqmon GUI select Rates and Deadtimes
- daqmon
  → Started with **setup fer; daqmon**
- Run Control
  → Started with **setup fer; rc**
- Error Handler
  - Started with Run Control

- Note: detailed instructions on EVB/L3 web pages

RC parameters

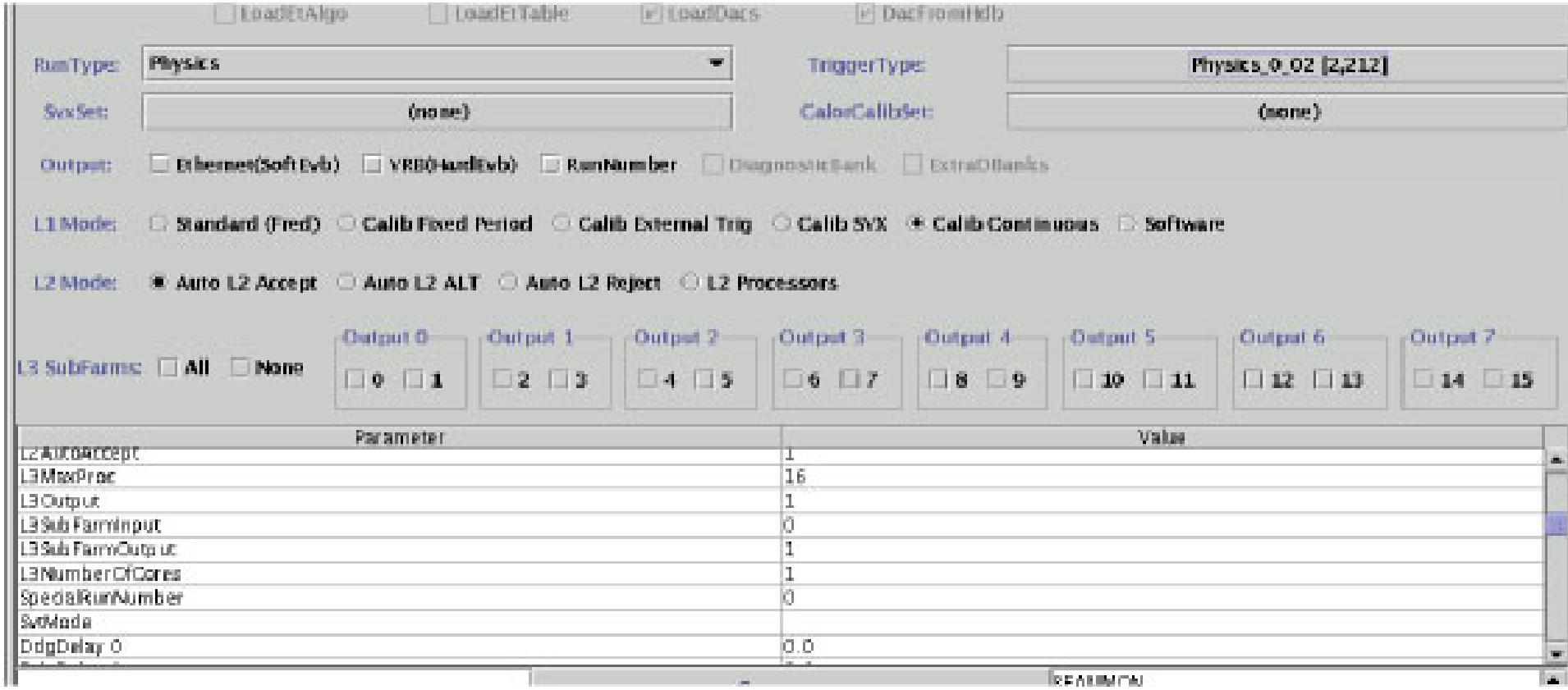

1. Include one, several or all Level3 subfarms.
2. Include Hardware Event Builder.
3. Choose Level3 tag.

EVB/L3 Ace Control Panel

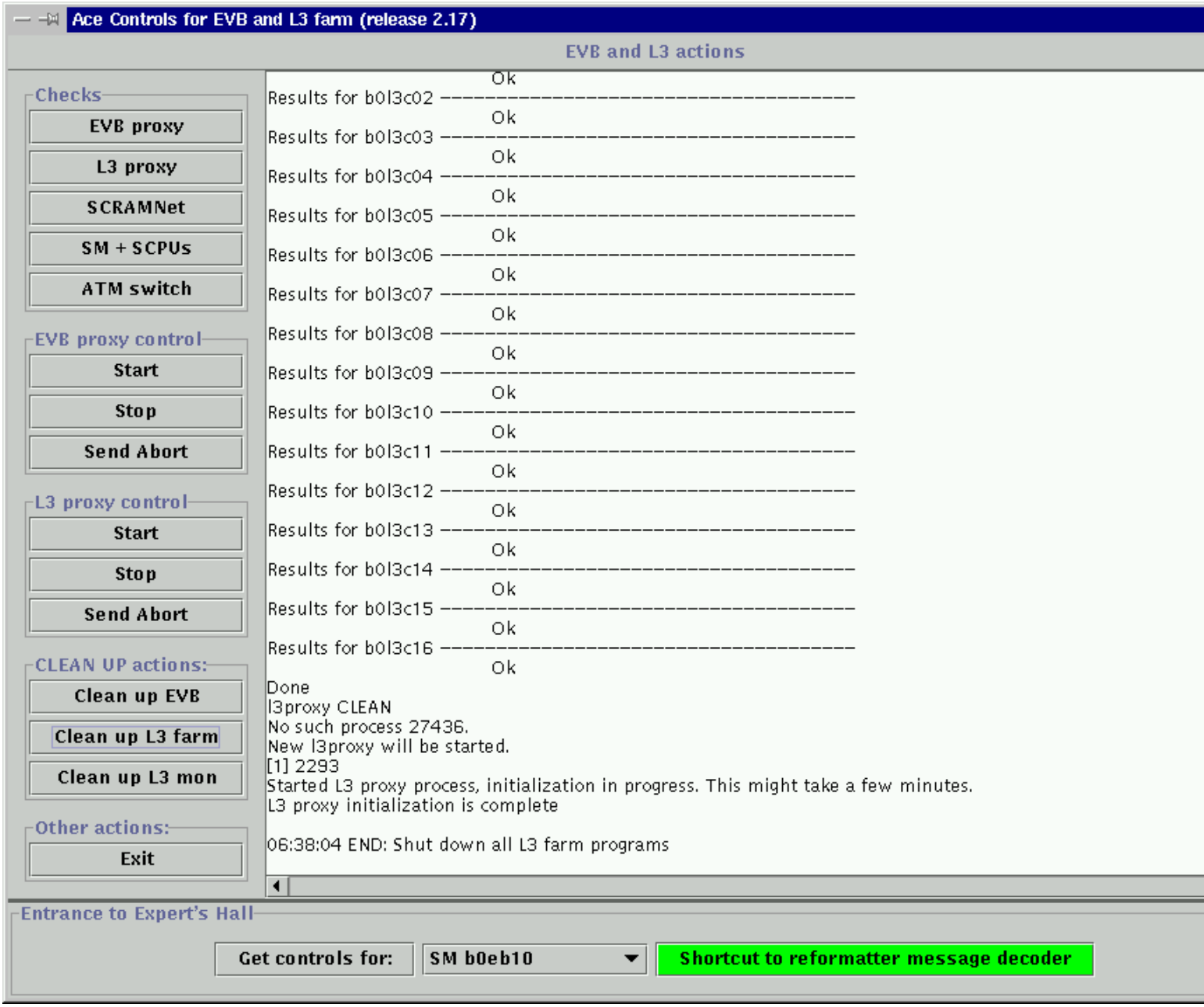

- Check status of primary components
- Start, stop proxies and do full cleanup of EVB and L3
- Reset state of any partition (e.g., in case of RC crashes)
- Gives access to EVB Expert GUIs and Reformatter Decoder

Level3 Display

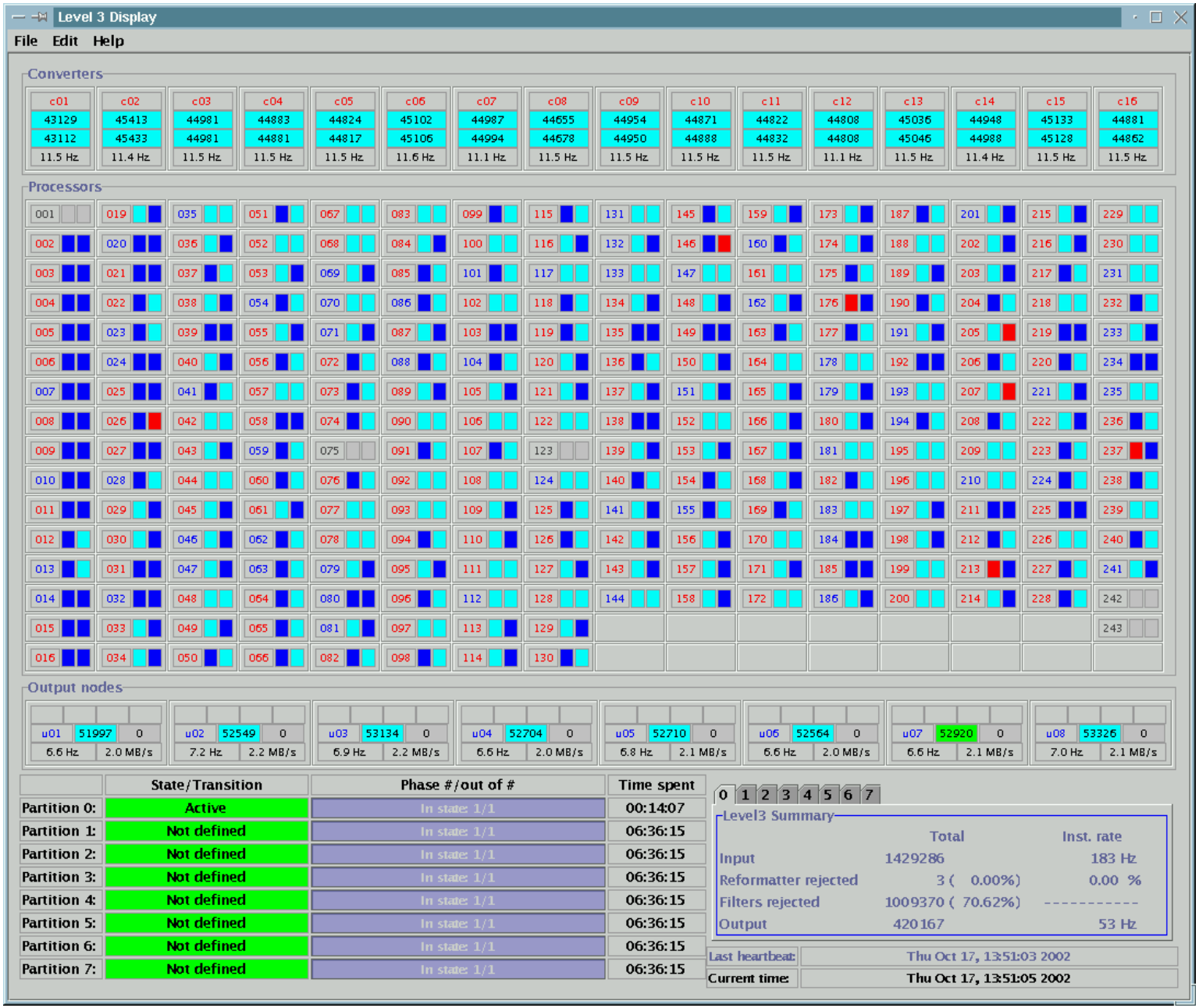

Level3 Display

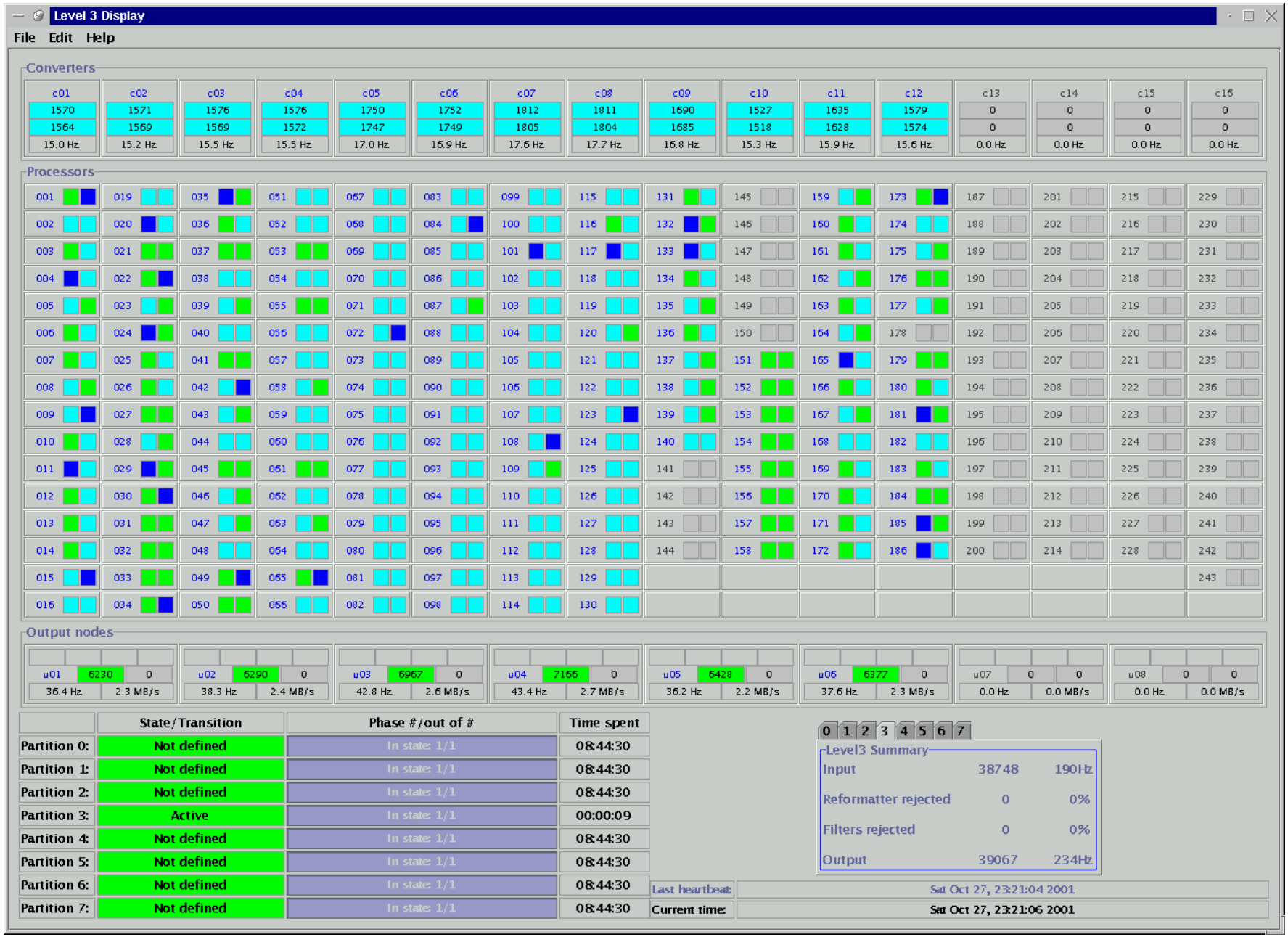

Level3 Display

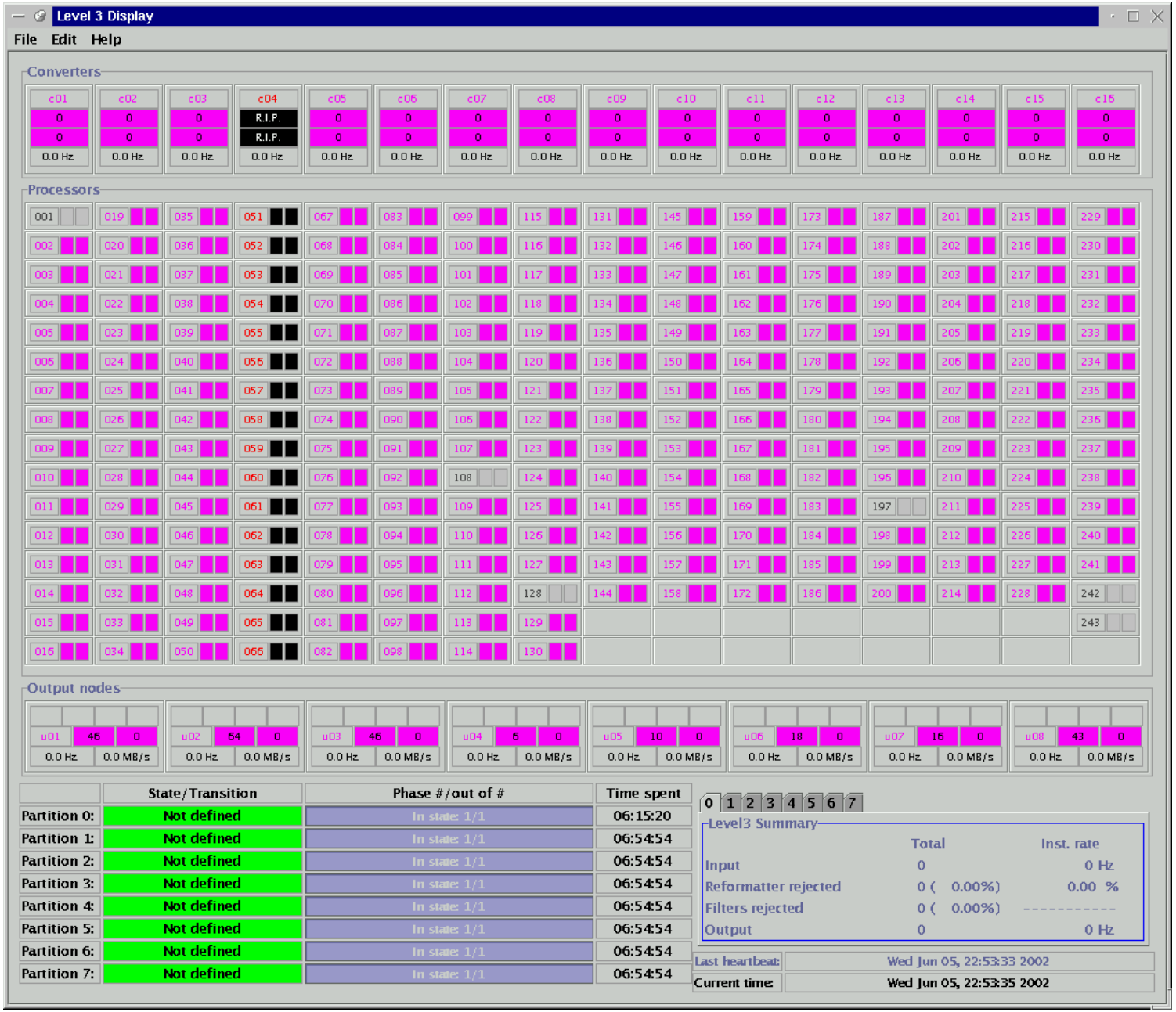

Level3 Display

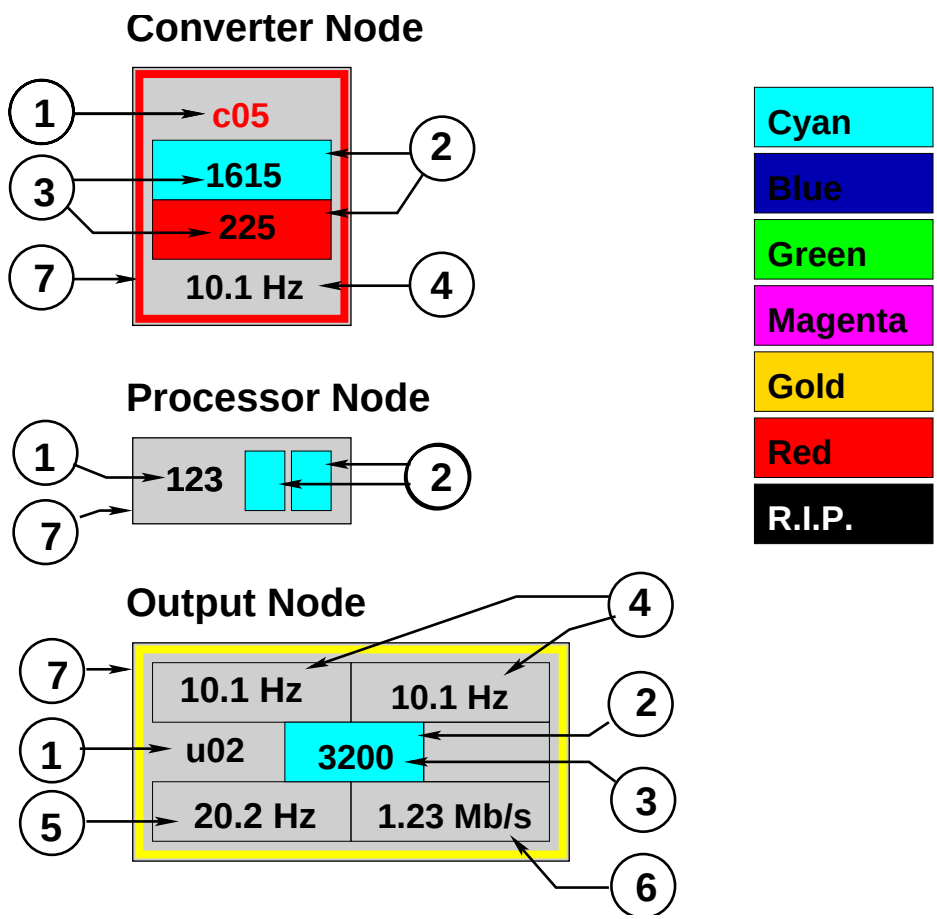

1. Node name. Color coded *Control* state.
2. Color coded *Analysis Chain* state. Two per node.
3. Number of processed events. (Converter and Output only)
4. Event rate for the subfarm. (Converter and Output only)
5. Output event rate for the Output node. (Output only)
6. Output data rate for the Output node.
7. Border. Color coded *System* state.

Note: To ensure the Display is being properly updated one may reset the window. (E.g., when a node appears magenta but nevertheless procesing events.)

Level3 Display

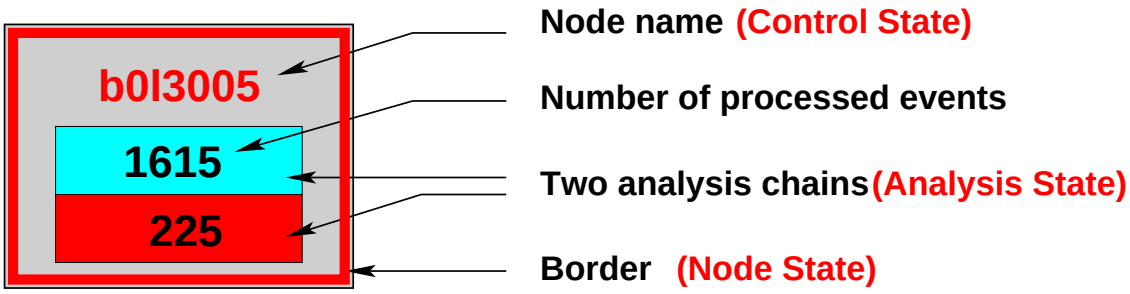

BLUE	CYAN	GREEN	MAGENTA	GOLD	RED	R.I.P.

Control State

- Error (red) - Level3 Errors (Click on the box to see Error messages).

Analysis State

- Input (Cyan) - Waiting for input.
- Busy (Dark Blue) - Chain is busy with event.
- Output (Green) - Waiting for output
- End (Magenta) - Node ended the run.
- Old (Gold) - Not updated. Probably monitoring failure.
- Dead (Red) - L3 Filter crashed. All necessary procedures are done automatically at the end of run.
- Unpingable (Black) - No connection to the node. If a node remains in this state for several minutes it is probably dead.

Node Hardware State

- Occasional yellow - Ok if not for the whole farm.
- Permanent red - System/HW problem (Disk full, memory, etc.)

For color map check Level3 Display Help menu.

L3 Partition Monitor of L3 Display

	State/Transition	Phase #/out of #	Time spent
Partition 0:	In transition: End	Collect EoR summary: 2/3	00:00:13
Partition 1:	Not defined	In state: 1/1	00:00:13
Partition 2:	Not defined	In state: 1/1	00:00:13
Partition 3:	Not defined	In state: 1/1	00:00:13
Partition 4:	Not defined	In state: 1/1	00:00:13
Partition 5:	Not defined	In state: 1/1	00:00:13
Partition 6:	Not defined	In state: 1/1	00:00:13
Partition 7:	Not defined	In state: 1/1	00:00:13

Shows states and transitions of hardware partitions.

Things worth checking

- How many hardware partitions are running with Level3.
- If bar State/Transition is yellow - Level3 received the RC transition message shown in the box.
- If field Time spent is more than 5 min - Failure.
- If all bars are red - Level3 Proxy is dead or L3 display lost connection. Check L3 Proxy from Ace Control Panel. Reset/restart L3 Display or restart L3 Proxy depending on result.

Level3 Summary

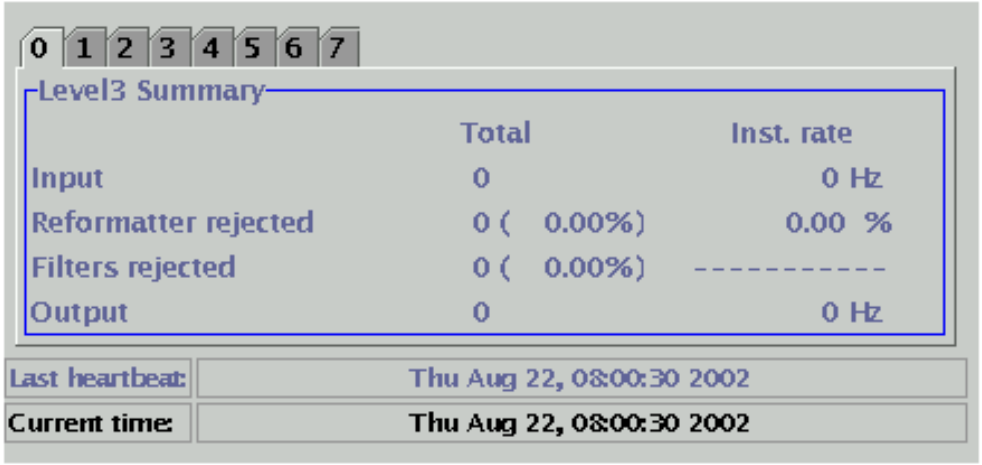

Shows input output and rejection rates/events.

Things worth checking

- Input count and rate. Compare with RC number.
- Reformatter rejection count and rate. If higher than threshold (1%) decode reformatter error, identify failing component.
- Filter rejection count and rate. If close to 100%,- do something. (Noisy Level1 trigger?)
- Output count and rate. Compare with CSL rates.
- Notice that each Level3 chain sends a "Begin Run" event to the output node at the end of ColdStart transition. Run begins with NON ZERO output event counter.

L3 Display: Node details

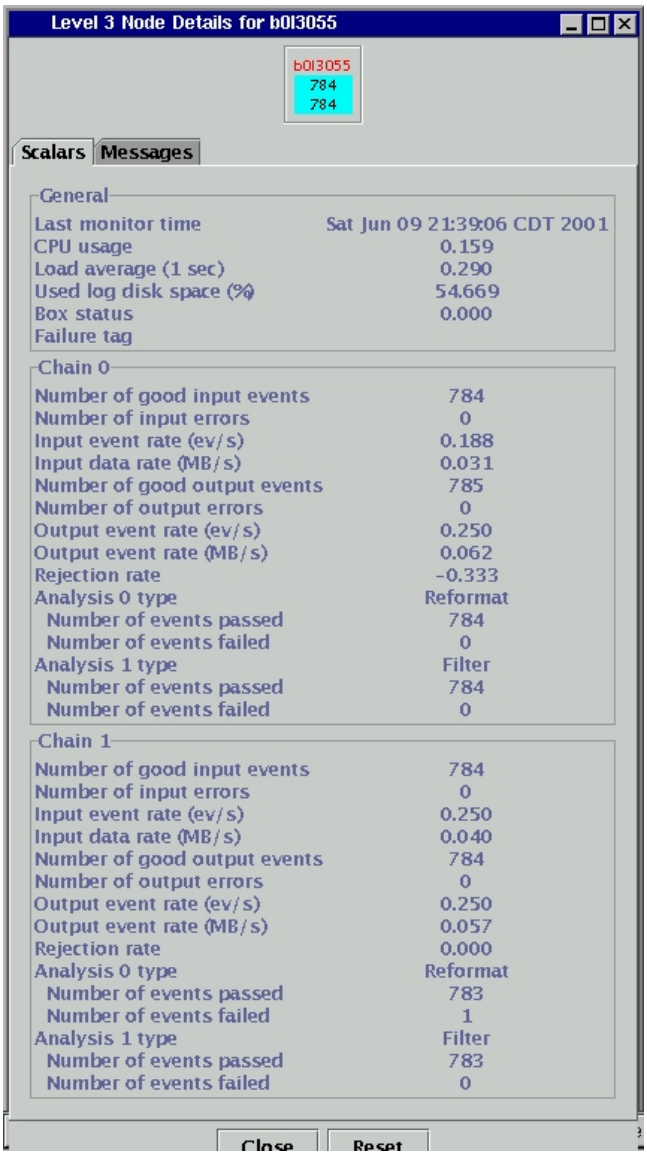

Things worth checking

- Monitoring heartbeat.
- Events pass/fail for Reformatter and L3 Filter.
- Number of input/output errors. (Esp. for converters)
- Input/Output data/event rate. One can find the size of the event by dividing data rate to event rate.

To open: click on any node of L3 Display

Error Logger

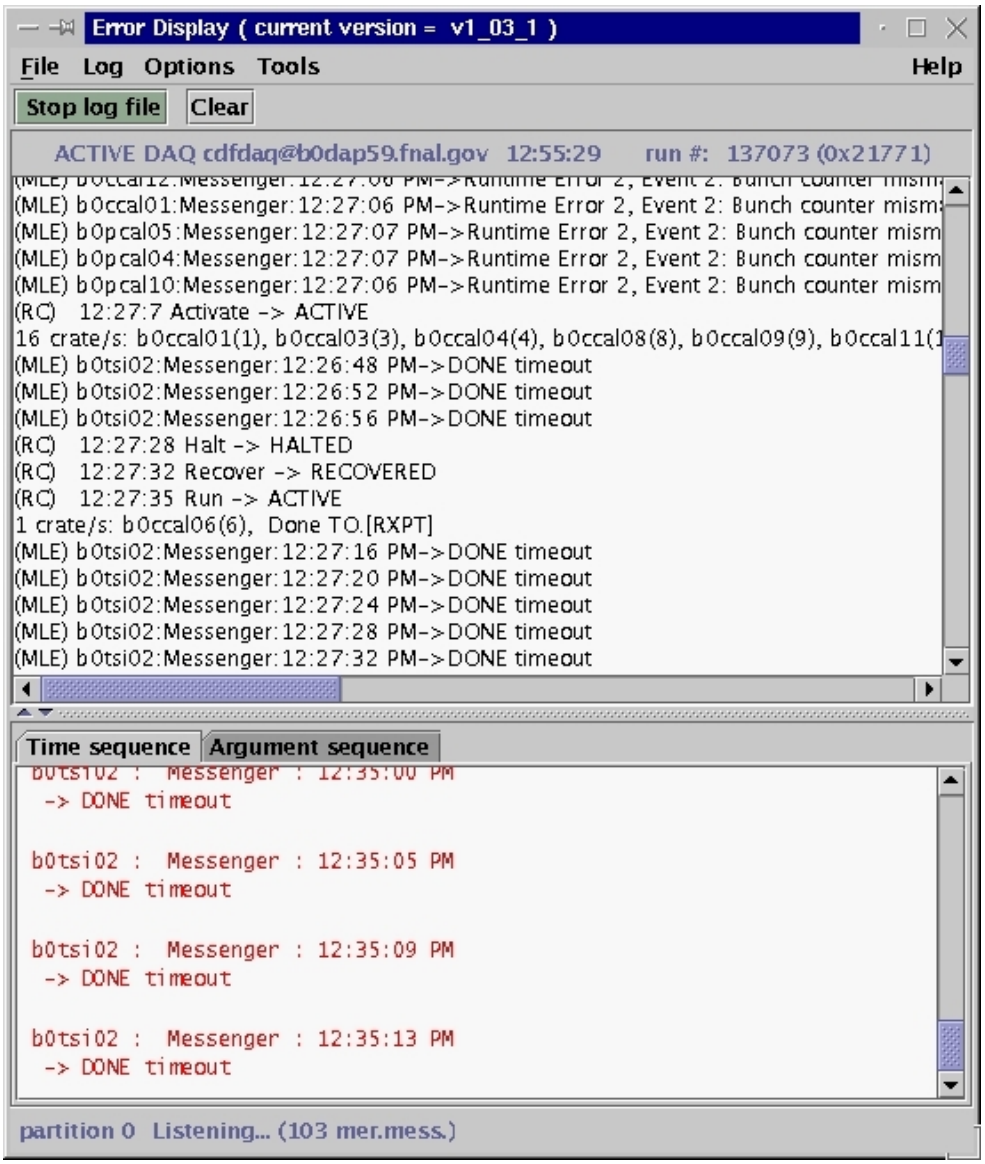

Read the error messages in the RC Error Logger to try to identify the problem better.
Read carefully the messages: the procedure to follow is always explained in details

Timeouts

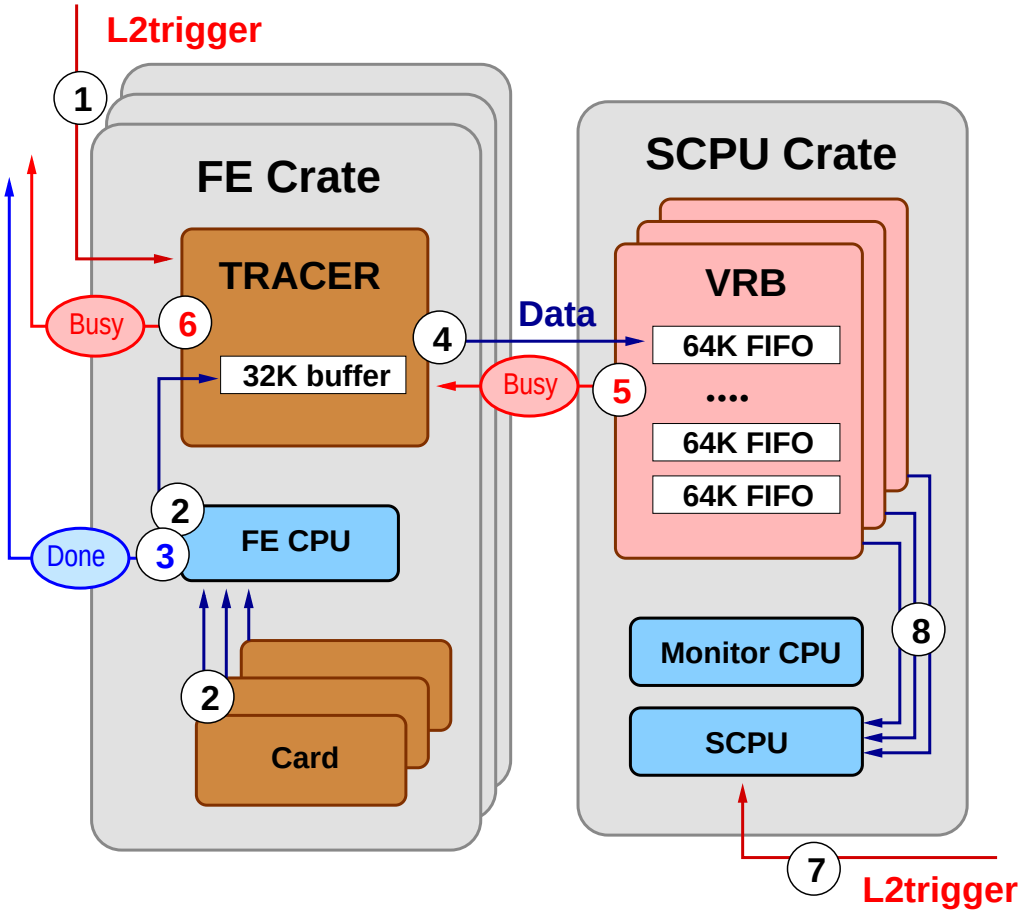

1. Trigger comes to Tracer from Trigger Cross Point
2. Cards load data to Tracer Buffer
3. FE CPU sets DONE signal if everything is ok. If DONE signal is not set Return XPT send DONE timeout to TS
4. Tracer sends Data to VRB FIFO
5. If FIFO is full VRB sends BUSY signal to Tracer
6. Tracer sends BUSY signal to Return XPT
7. If everything is ok SM notifies SCPUs about trigger
8. SCPUs load data from VRBs

Dealing with Reformatter Errors

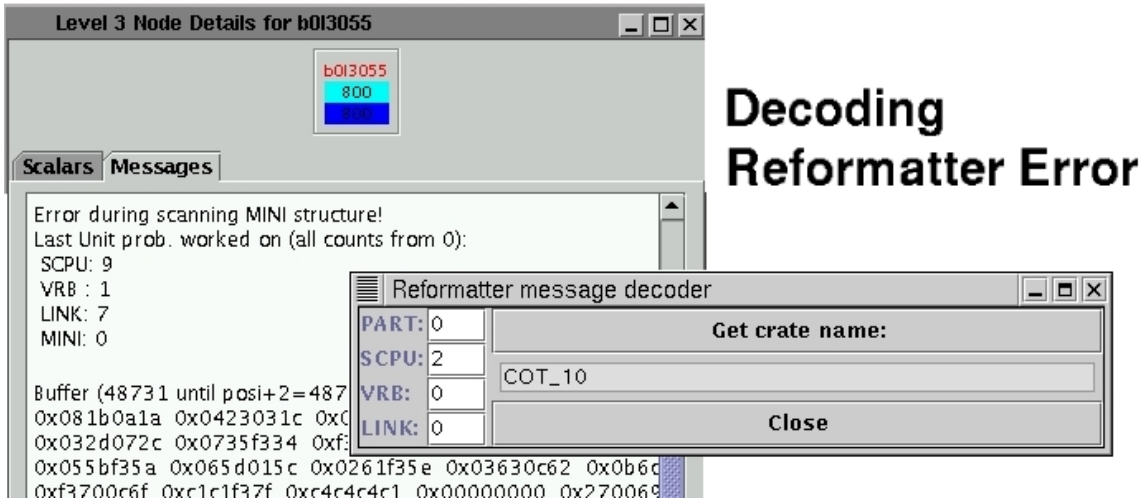

Find relevant FE component with a tool started by green button on Ace Control Panel.

- You should be in Active or Idle state to use the tool.
- If you can not start the tool restart Ace Control Panel.
- Server is not found popup - try again, page Level3.
- Link is not in use popup - Corrupted data can not provide us with correct link number. Change link number to 0 and try again.

The reformatter rejection rate can be found on the L3 rate monitor (at bottom, right part of L3 Display).
A tool is also running, RefMon, which calculates the rejection rates over the last 30 seconds; If rejection exceeds some predefined level RC pops up an orange window with instructions for the Aces.
Check L3 Rate Monitor for reformatter error rate.

Networks, Buffers, Data Flow, Errors

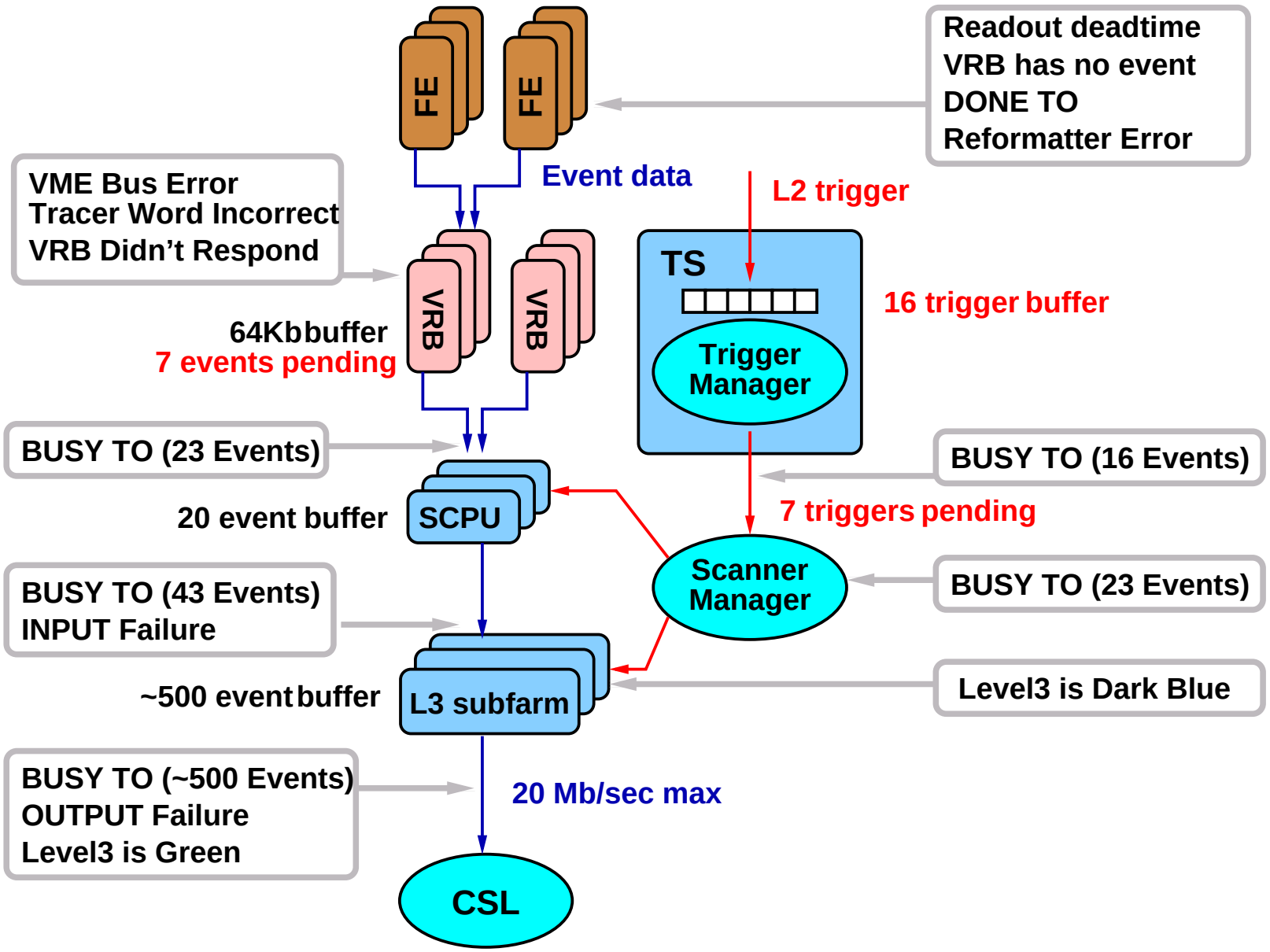

General Remarks

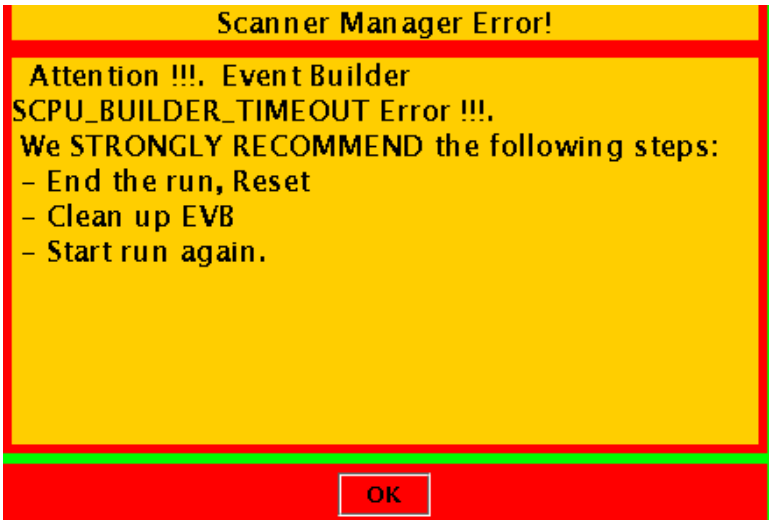

- If you get an orange popup window with EVB/Level3 problem follow the instructions.
- Check RC Error Display for error messages.
- Any transition can not take more than 5 minutes. If it takes more it means that there is a problem. L3 or CSL.
- Level3 is green - most likely CSL problem.
- Level3 is gold - L3 monitoring problem.
- You have to be in START state when cleaning up EVB and Level3 or restarting Proxies.
- If you abnormally closed the partition you have to cleanup EVB.
- Check white board for information on currently available subfarms.

Things to Keep an Eye on

- L3 Display Color.
  - Green (Output State)- problem is downstream. Check if CSL is alive. 20Mb/sec is max CSL input capacity
  - Gold (Old) - Monitoring problem. Cleanup L3 mon.
  - Dark Blue (Busy State) - not enough process power. Use all available subfarms.
- Check if CSL is accepting events (read its monitoring tools).
- Check Rates and Dead time.
- Check Reformatter rejection rate:if $> 1\%$ find source&page expert
- Look if Level3 proxy is alive.
- Look if EVB proxy is alive.

Other minimum knowledge

- Understand general information on Level3 Display.
- Be familiar with Ace Controls for Level3 and EVB.
- Know the location of EVB components. (*b0eb10 on the 3rd floor!*)
- Understand Deadtimes; Busy and Done timeouts.
- Know how to deal with Reformatter errors.

Assistance

Documentation

- Introduction for Aces, *CDF Note 5793* – please read.
- Manual, *CDF Note 6138*
- Help pages,
  http://www-cdfonline.fnal.gov/evbl3shift/evbl3shift.html

Note: html versions of the notes are available on the help pages as well.

Note: EVB/L3 help pages are linked from the general Ace help page.

Experts list

- Alberto Belloni (pager)
- Arkadiy Bolshov (pager)
- Boris Iyutin (pager)
- Nuno Leonardo (pager)
- Guillelmo Gómez-Ceballos
- Ilya Kravchenko

Note: Pager and telephone numbers are posted in the Control Room and Ace web page.

EVB/L3 help pages

Netscape: How to run the hardware event builder and Level 3 farm

File Edit View Go Window Help

Bookmarks Location: http://www-cdfonline.fnal.gov/evbl3 What's Related

How to run the hardware event builder and Level 3 farm

Ace - Expert

QUICK HELP !!!

Getting started

Monitoring

Normal RC actions

Troubleshooting

Details

Overview

Experts' Corner

Call experts

Guide

In this web page you find various information describing the Event Builder and Level 3 Systems of CDF Run II. Its main purpose is to serve as a source of information about EVB/L3 and provide guidance to the shift crew, the ACEs in particular.

Various documentation is available to help getting familiar with the works of the system. Together with these pages, the main reference designed for ACEs is CDF note 5793, which you are definitely encouraged to read.

- How to run the hardware event builder and Level 3 farm (these pages)
  postscript (no pictures); comments
- ACE training talk
  transparencies; comments
- EVB and Level3 for ACES, CDF note 5793
  postscript, html; comments
- Event Builder and Level 3 Manual for Experts, CDF note 6138
  postscript, html; comments (new!)

An effort is done to keep the information and various instructions in these pages up-to-date. If something however has escaped that you find obsolete, or have any **suggestions**, comments are very welcome.

100%

Netscape: Eve

File Edit View

Bookmarks

Farm recovery

Expert's Manual
- Overview
- Hardware & OS
- Event Builder
- Level 3
- Common
- DAQ

Farm maintenance

E-logs

EVB progect

Level3 project

ACEs' page

Nuno Leonardo

100% 100% of 1K