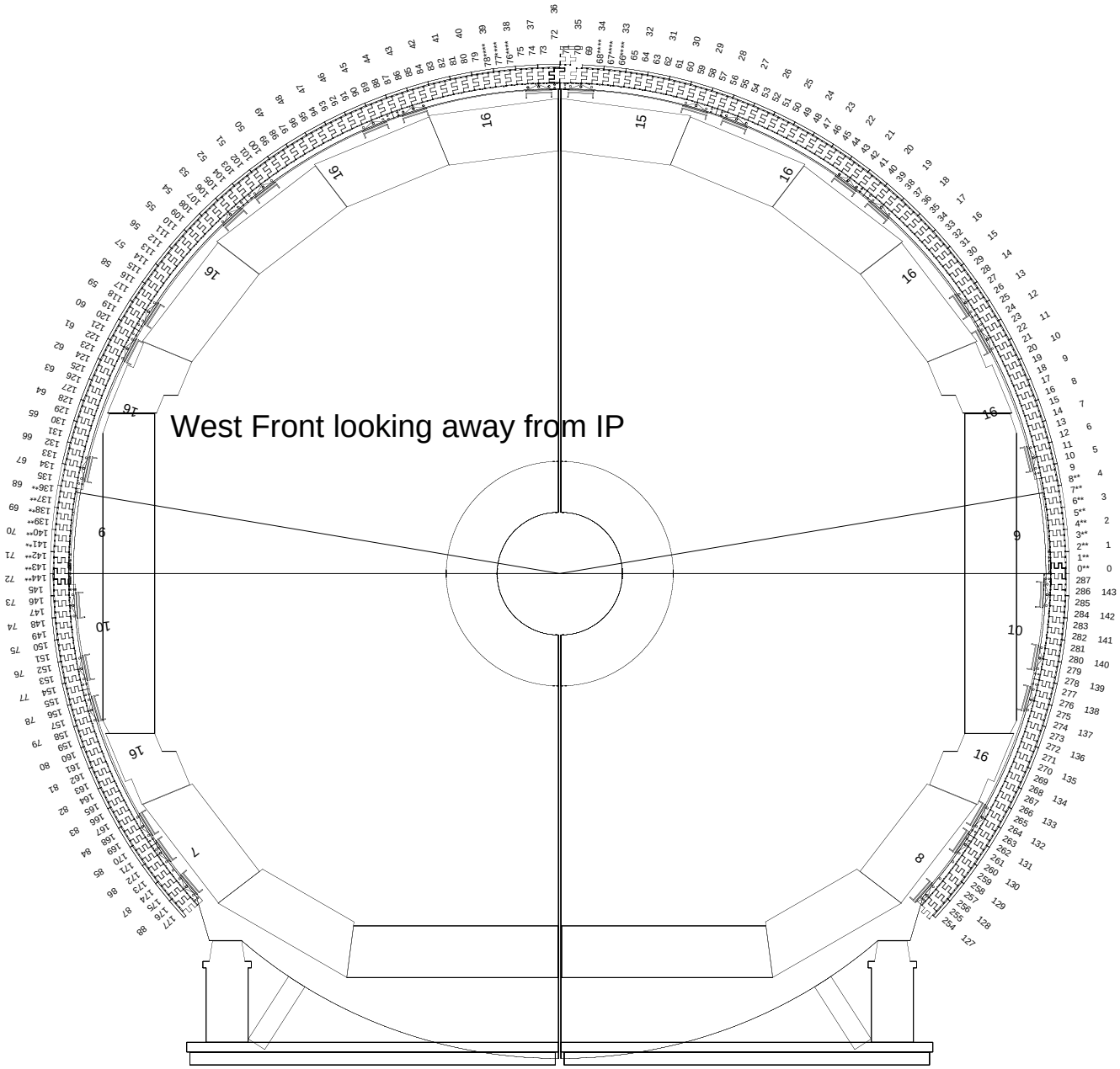
West Front looking away from IP