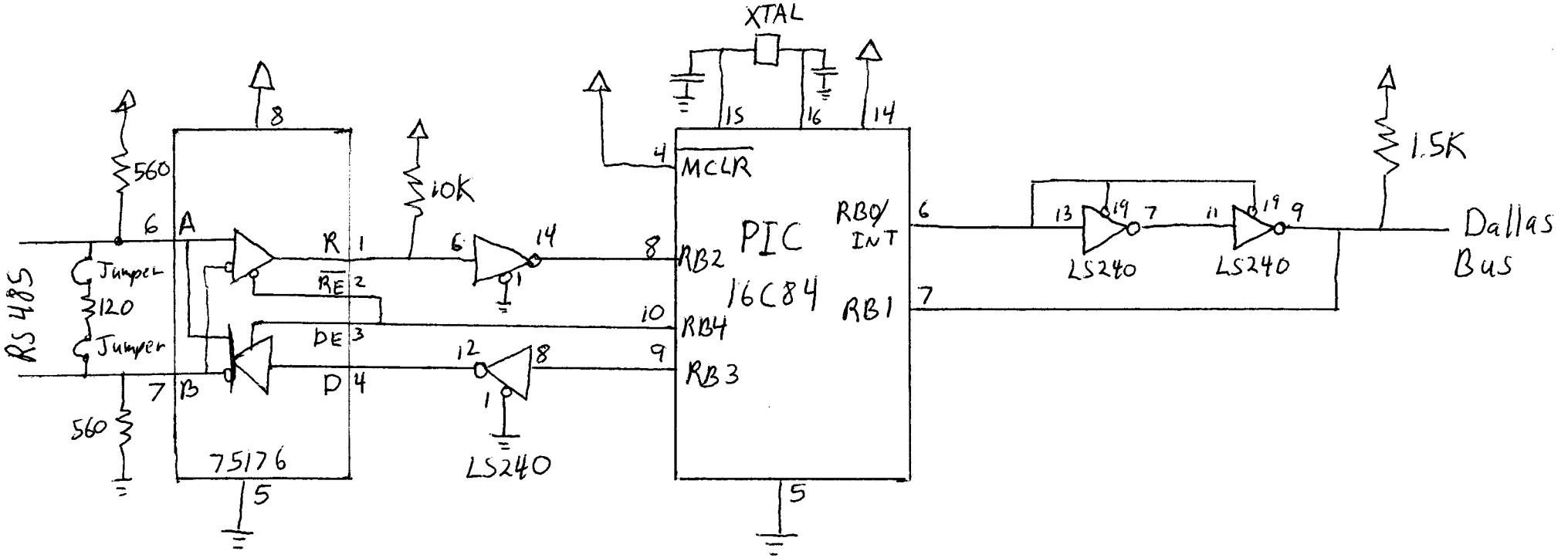

Note: On present board (2/18/98)
560 resistors are interchanged
(A goes to ground; B to V_{cc})

2/18/98
C. Blocker